UNITED STATES DEPARTMENT OF COMMERCE
National Oceanic and Atmospheric Administration
NATIONAL MARINE FISHERIES SERVICE
Silver Spring, MD 20910

JUN 20 2008

Mr. Chris C. Oynes
Associate Director for Offshore Minerals Management
Minerals Management Service
1849 C Street NW, Mailstop 4000
Washington, DC 20240-0001

Dear Mr. Oynes:

On August 28, 2006, the National Marine Fisheries Service (NOAA Fisheries Service) completed a biological opinion regarding the effects of the removal of offshore structures in the Gulf of Mexico Outer Continental Shelf on threatened and endangered species. The incidental take statement (ITS) included with that opinion exempted the take of listed sea turtle species but did not include exemption of take of sperm whales. With the promulgation of regulations governing incidental take of marine mammals under section 101(a)(5) of the Marine Mammal Protection Act (MMPA), NOAA Fisheries Service amended the ITS to include an exemption for take of sperm whales.

Since the sperm whale is protected under both the MMPA and the Endangered Species Act of 1973, as amended (ESA), it is necessary that any taking of these animals be authorized under both Acts. Our August 28, 2006, biological opinion concluded that the effects of structure removal activities in the Gulf of Mexico were not likely to jeopardize listed species, but we did not include an exemption for take of endangered sperm whales in the ITS since that take had not yet been authorized under the MMPA. Since the MMPA regulations have been issued, we amended the ITS of that biological opinion. However, under NMFS' implementing regulations for section 101(a)(5)(A), a "letter of authorization" is also required to lawfully take marine mammals incidental to such activities. Accordingly, any take of listed marine mammals exempted through this ITS is conditioned upon the issuance of an appropriate letter of authorization. NMFS has not yet authorized the incidental take of marine mammals under a letter of authorization. At the time a letter of authorization is provided, the take exemption under the ESA will apply to listed marine mammals.

The ITS is also amended with editorial corrections, updated reference to the Notice to Lessees, and the following two additional terms and conditions to minimize the take of sea turtles:

- If sea turtle(s) appear to remain within the impact zone of a structure to be removed using explosives, the on-site NMFS observer shall exercise discretion in the implementation of measures or modification of the mitigation program procedures that could serve to avoid or minimize impacts to sea turtle(s).
- MMS shall allow an option for trained diver(s) to attempt capture of sea turtles

Printed on Recycled Paper

known to be present around a structure slated for removal by explosive severance. NMFS SERO shall be notified prior to any capture attempts and the capture, handling, holding, and release of sea turtles shall be under the guidance and supervision of NMFS observers

Corrections and clarification of surface and aerial monitoring procedures were also made to the mitigation for removals using explosive-severance. The description of the mitigation for explosive-severance, with the changes incorporated, is contained in the Appendix to the amended ITS. Each of these changes was discussed with staff in the headquarters and Gulf of Mexico Region of the Minerals Management Service.

As stated in the August 28, 2006, biological opinion, and as provided in 50 CFR 402.16, reinitiation of formal consultation is required where discretionary federal agency involvement or control over the action has been retained and if: (1) the amount or extent of incidental take is exceeded; (2) new information reveals effects of this action that may affect listed species or critical habitat in a manner or to an extent not previously considered in this biological opinion; (3) the identified action is subsequently modified in a manner that causes an effect to the listed species or critical habitat that was not considered in this biological opinion; or (4) a new species is listed or critical habitat designated that may be affected by the identified action. If the amount or extent of incidental take is exceeded, the Minerals Management Service should immediately request initiation of formal consultation.

Copies of this amended ITS, along with the August 28, 2006, biological opinion and the letter of authorization, must be in the possession of anyone operating under these authorities. If you have questions regarding this ITS, contact Angela Somma at (301) 713-1401.

Sincerely,

James H. Lecky
Director, Office of Protected Resources

cc: Joe Christopher, Regional Supervisor for Leasing and Environment
Jill Lewandowski, Protected Species Coordinator

Enclosure

UNITED STATES DEPARTMENT OF COMMERCE
National Oceanic and Atmospheric Administration
NATIONAL MARINE FISHERIES SERVICE
Silver Spring, MD 20910

JUN 19 2008

MEMORANDUM FOR: The Record

FROM: James H. Lecky, Director
Office of Protected Resources

SUBJECT: Amended Incidental Take Statement to the Biological Opinion on the Removal of Offshore Structures in the Gulf of Mexico OCS

By this memorandum, I approve the attached Incidental Take Statement to NMFS' Office of Protected Resources' August 28, 2006, biological opinion on the removal of offshore structures in the Gulf of Mexico Outer Continental Shelf and associated authorization incidental take of marine mammals under the Marine Mammal Protection Act. This Incidental Take Statement applies to the Minerals Management Service's permitting and oversight of offshore structure removal activities. A copy of this amended Incidental Take Statement must be provided to the Minerals Management Service and NMFS' Permits, Conservation and Education Division.

Printed on Recycled Paper

UNITED STATES DEPARTMENT OF COMMERCE
National Oceanic and Atmospheric Administration
NATIONAL MARINE FISHERIES SERVICE
Silver Spring, MD 20910

MAY 30 2008

MEMORANDUM FOR: Michael Payne, Chief
Permits, Conservation and Education Division

FROM: Angela Somma, Chief
Endangered Species Division

SUBJECT: Amended Incidental Take Statement to Biological Opinion on the Removal of Offshore Structures in the Gulf of Mexico OCS and Associated Incidental Take Authorization Under the Marine Mammal Protection Act

Attached is a copy of the amended Incidental Take Statement for NMFS' Office of Protected Resources' August 28, 2006, biological opinion on explosive removal of offshore structures in the Gulf of Mexico Outer Continental Shelf. The Incidental Take Statement of this biological opinion has been amended to reflect the Permits, Conservation and Education Division's issuance of a section 101(a)(5) rule governing harassment of marine mammals associated with the activities.

As stated in the August 28, 2006, biological opinion, and as provided in 50 CFR 402.16, reinitiation of formal consultation is required where discretionary Federal agency involvement or control over the action has been retained (or is authorized by law) and if: (1) the amount or extent of the incidental take is exceeded; (2) new information reveals effects of the agency action that may affect listed species or critical habitat in a manner or to an extent not considered in this opinion; (3) the agency action is subsequently modified in a manner that causes an effect to the listed species or critical habitat not considered in this opinion; or (4) a new species is listed or critical habitat designated that may be affected by the action.

Printed on Recycled Paper

INCIDENTAL TAKE STATEMENT

Section 9 of the Act and Federal regulation pursuant to section 4(d) of the Endangered Species Act (ESA) prohibit the take of endangered and threatened species, respectively, without special exemption. Take is defined as to harass, harm, pursue, hunt, shoot, wound, kill, trap, capture or collect, or to attempt to engage in any such conduct. Harm is further defined by NMFS to include significant habitat modification or degradation that results in death or injury to listed species by significantly impairing essential behavioral patterns, including breeding, feeding, or sheltering. Incidental take is defined as take that is incidental to, and not the purpose of, the carrying out of an otherwise lawful activity. Under the terms of section 7(b)(4) and section 7(o)(2), taking that is incidental to and not intended as part of the agency action is not considered to be prohibited taking under the Act provided that such taking is in compliance with the terms and conditions of this Incidental Take Statement (ITS).

These measures are non-discretionary and must be binding conditions of Minerals Management Service's (MMS) permits for structure removals and National Marine Fisheries Service's (NMFS) Permits, Education and Conservation Division's marine mammal incidental take authorization, as appropriate, for the exemption in section 7(o)(2) to apply. MMS and NMFS have a continuing duty to regulate the activities covered by this incidental take statement. If MMS or NMFS fails to assume and implement the terms and conditions or fails to require the applicants to adhere to the terms and conditions of the incidental take statement through enforceable terms that are added to the permits and authorizations, the protective coverage of section 7(o)(2) may lapse. In order to monitor the impact of incidental take, MMS (and NMFS) must report the progress of the action and its impact on the species to NMFS Southeast Regional Office (SERO) and Office of Protected Resources as specified in the incidental take statement.

ESA section 7(b)(4) states that take of ESA-listed marine mammals must be authorized under MMPA section 101(a)(5) before the Secretary can issue an ITS for listed marine mammals. The ITS attached to NMFS' August 28, 2006, biological opinion on the removal of offshore structures in the Gulf of Mexico Outer Continental Shelf did not authorize the taking of listed marine mammals since the proposed taking had not been authorized under the MMPA. This ITS is being amended to include listed marine mammals because NMFS has issued regulations under section 101(a)(5)(A) governing take of marine mammals incidental to the removal of offshore structures. However, under NMFS' implementing regulations for section 101(a)(5)(A), a "letter of authorization" is also required to lawfully take marine mammals incidental to such activities. Accordingly, any take of listed marine mammals exempted through this ITS is conditioned upon the issuance of an appropriate letter of authorization. NMFS has not yet authorized the incidental take of marine mammals under a letter of authorization. At the time a letter of authorization is provided, the take exemption in ESA section 7(o)(2) will apply to listed marine mammals.

Amount of Take

NMFS anticipates that the removals of offshore structures in the Gulf of Mexico Outer Contintental Shelf may result in the incidental take of listed species. Green, loggerhead, Kemp's

ridley, hawksbill, and leatherback sea turtles may be exposed to explosions, captured in trawl nets during site clearance, or struck by vessels associated with removal operations. We expect some sea turtles may be killed, wounded, harmed, harassed by exposure to explosions while some sea turtles may be captured and harmed by trawl nets. Sea turtles struck by vessels could be killed or wounded.

An incidental take, by injury or mortality, of 3 sea turtles per year or 18 sea turtles during the next 6 years is anticipated during detonations. Most of these would be loggerhead sea turtles. Thus, a reasonable estimate is 15 loggerheads and 3 total of any of the other species (Kemp's ridley, green, hawksbill, or leatherback) for a 6-year period. Sea turtles have not been captured in site clearance trawl nets. However, mitigation measures are required because a sea turtle may be captured. NMFS anticipates 1 sea turtle of any species may be captured in a trawl net over the 6-year period.

In addition to the take by injury or mortality from detonations and capture in a trawl net, take of sea turtles, by harassment, is anticipated. Up to 84 sea turtles per year may be exposed to detonations and other aspects of removal operations, some of which would be harassed. Again, mostly loggerheads would be harassed but the other sea turtle species may be harassed as well. Assuming all exposed sea turtles are harassed, since we can not determine which individuals will be, we anticipate up to 84 sea turtles of any species would be taken annually by harassment.

An incidental take, by harassment, of 2 sperm whales per year or 12 sperm whales during the next 6 years is also anticipated during detonations. The likelihood of injury is low and, particularly with implementation of mitigation measures, other forms of take such as wounding or killing is not expected.

These take estimates are based on MMS' projections of 170 to 273 explosive-severance removals per year (see Table 7 of the August 28, 2006 biological opinion).

Harassment of sea turtles and sperm whales is not readily observed. Assuming any behavioral response of sea turtles or sperm whales to aerial surveys, vessel approaches, or exposure to detonation sounds leads to harassment would ensure that we avoid Type II errors. Monitoring of the number of sea turtles and sperm whales observed around removals before and after detonations would be needed to track the number of sea turtles that could be harassed or otherwise taken.

Effect of Take

As discussed in the biological opinion, MMS' permitting of structure removals in the Gulf of Mexico OCS and associated authorization for incidental marine mammal takes from NMFS is not likely to result in jeopardy to loggerhead, Kemp's ridley, green, hawksbill, or leatherback sea turtles or to the sperm whale.

Reasonable and Prudent Measures

The reasonable and prudent measures described below are necessary and appropriate to minimize incidental take of green, loggerhead, Kemp's ridley, hawksbill, and leatherback sea turtles and sperm whales from the proposed actions.

Pursuant to section 101(a)(5) of the MMPA and NMFS implementing regulations at 50 CFR § 216, the following measures specified in the regulations governing incidental take of this proposed action are required to be consistent with the total taking allowable under the MMPA authorization and to effect the least practicable adverse impact on the species and its habitat:

§ 216.216 Mitigation

(a) The activity identified in § 216.211(a) must be conducted in a manner that minimizes, to the greatest extent practicable, adverse impacts on marine mammals and their habitats. When conducting operations identified in § 216.211(a), all mitigation measures contained in this subpart and in the Letter of Authorization issued pursuant to §§ 216.106 and 216.218 must be implemented. When using explosives, the following mitigation measures must be carried out:

(1)(A) If marine mammals are observed within (or about to enter) the marine mammal impact zone identified in Table 1 in § 216.217(b)(1) column 5 for the relevant charge range and configuration (i.e., BML or AML) for the activity, detonation must be delayed until the marine mammal(s) are outside that zone;

(B) Pre-detonation surveys shall not begin prior to sunrise and detonations shall not occur if the post-detonation survey cannot be concluded prior to sunset;

(C) Whenever weather or sea conditions preclude adequate aerial, shipboard or subsurface marine mammal monitoring as determined by the trained observer, detonations must be delayed until conditions improve sufficiently for marine mammal monitoring to be undertaken or resumed;

(D) Whenever the weather or sea conditions prevent implementation of the aerial survey monitoring required under § 216.217(c)(2), the aerial survey must be repeated prior to detonation of charges; and

(E) Multiple charge detonations must be staggered at an interval of 0.9 sec (900 msec) between blasts.

(b) If a marine mammal is found seriously injured, or dead, the explosive severance activity will immediately cease and the holder of the Letter of Authorization, designee or the lead observer will contact the Minerals Management Service and the Regional Administrator, National Marine Fisheries Service' Southeast Regional Office, or designee at the earliest opportunity. Procedures and monitoring methods will be reviewed and, if necessary, appropriate changes made to the mitigation and monitoring measures prior to conducting the next detonation to avoid future injury or mortality takings.

(c) Any mitigation measures proposed to be contained in a Letter of Authorization that are not specified in this subpart, or not considered an emergency requirement under § 216.219(d), will first be subject to notice and comment through publication in the Federal Register, as provided in § 216.219(c).

§ 216.217 Requirements for monitoring and reporting

(a) Holders of Letters of Authorization issued for activities described in § 216.211(a) are required to cooperate with the National Marine Fisheries Service, and any other Federal, state or local agency with regulatory authority over the offshore oil-and-gas activities for the purpose of monitoring the impacts of the activity on marine mammals.

(b)(1) Table 1 summarizes the required mitigation and monitoring survey modes, duration and zones for all blasting scenarios of marine mammal impact zones for implementation of surface and aerial monitoring requirements depending upon charge weight and severance scenario.

(2) Holders of Letters of Authorization must fully comply with the relevant mitigation and monitoring program for the explosive-severance activity described in subparagraph (c) of this paragraph that corresponds to the holder of the Letter of Authorization's blast scenario shown in Table 1.

(c) Holders of Letters of Authorization must ensure that the following monitoring programs are conducted as appropriate for the required monitoring scenario.

(1) Surface monitoring survey. A surface monitoring survey must be conducted for the length of time that corresponds to the relevant explosive severance scenario. Surface monitoring surveys are to be conducted from the highest vantage point and/or other location(s) that provide the best, clear view of the entire impact zone. These vantage points may be on the structure being removed or proximal surface vessels (i.e., crewboats, derrick barges, etc.). Surface surveys are restricted to daylight hours only, and the monitoring will cease if the lead observer determines that weather or marine conditions are not adequate for visual observations.

(2) Aerial monitoring survey. Aerial surveys are required for all explosive severance scenarios except monitoring scenarios A1-A4. Aerial monitoring surveys are to be conducted from helicopters running standard low-altitude search patterns over the extent of the impact zone that corresponds to the appropriate explosive severance scenario. Aerial surveys will be restricted to daylight hours only, and cannot begin until the requisite surface monitoring survey has been completed. Aerial surveys will cease if the lead observer determines that weather or marine conditions are not adequate for visual observations, or when the pilot/removal supervisor determines that helicopter operations must be suspended.

(3) Acoustic monitoring survey

(A) Acoustic monitoring surveys are required to be conducted on all Standard, Large, and Specialty blasting scenarios conducted at slope (>200 m (656 ft)) locations (i.e., scenarios C2, C4, D2, D4, E2, and E4).

(B) Persons conducting acoustic surveys will be required to comply with NMFS-approved passive acoustic monitoring protocols and use approved devices and technicians.

(C) Acoustic surveys will be run concurrent with requisite pre-detonation surveys, beginning with the surface observations and concluding at the finish of the aerial surveys when the detonation(s) is allowed to proceed.

Table 1: Blast Categories, Mitigation Scenarios, Survey and Time Requirements For All Explosive-Severance Scenarios.

Blasting Category	Configuration (Charge wt/ placement)	Species Delineation Zone	Mitgation Scenario	Impact Zone Radius	Pre-Det Surface Survey (min)	Pre-Det Aerial Survey (min)	Pre-Det Acoustic Survey (min)	Post-Det Surface Survey (min)	Post-Det Aerial Survey (min)	Post-Post-Det Aerial Survey (Yes/No)	Waiting Period (min)
Very-Small	BML *(0-10 lb)*	Shelf (<200 m)	A1	261 m (856 ft)	60	N/A	N/A	30	N/A	No	30
		Slope (>200 m)	A2		90	N/A	N/A	30	N/A	No	30
	AML *(0-5 lb)*	Shelf (<200 m)	A3	293 m (961 ft)	60	N/A	N/A	30	N/A	No	30
		Slope (>200 m)	A4		90	N/A	N/A	30	N/A	No	30
Small	BML *(>10-20 lb)*	Shelf (<200 m)	B1	373 m (1,224 ft)	90	30	N/A	N/A	30	No	30
		Slope (>200 m)	B2		90	30	N/A	N/A	30	No	30
	AML *(>5-20 lb)*	Shelf (<200 m)	B3	522 m (1,714 ft)	90	30	N/A	N/A	30	No	30
		Slope (>200 m)	B4		90	30	N/A	N/A	30	No	30
Standard	BML *(>20-80 lb)*	Shelf (<200 m)	C1	631 m (2,069 ft)	90	30	N/A	N/A	30	No	30
		Slope (>200 m)	C2		90	30	120	N/A	30	No	30
	AML *(>20-80 lb)*	Shelf (<200 m)	C3	829 m (2,721 ft)	90	45	N/A	N/A	30	No	30
		Slope (>200 m)	C4		90	60	150	N/A	30	Yes	45
Large	BML *(>80-200 lb)*	Shelf (<200 m)	D1	941 m (3,086 ft)	120	45	N/A	N/A	30	No	30
		Slope (>200 m)	D2		120	60	180	N/A	30	Yes	45
	AML *(>80-200 lb)*	Shelf (<200 m)	D3	1,126m (3,693ft)	120	60	N/A	N/A	30	No	30
		Slope (>200 m)	D4		150	60	210	N/A	30	Yes	45
Specialty	BML *(>200-500 lb)*	Shelf (<200 m)	E1	1,500 m (4,916 ft)	150	90	N/A	N/A	45	No	45
		Slope (>200 m)	E2		180	90	270	N/A	45	Yes	45
	AML *(>200-500 lb)*	Shelf (<200 m)	E3	1,528 m (5,012 ft)	150	90	N/A	N/A	45	No	45
		Slope (>200 m)	E4		180	90	270	N/A	45	Yes	45

(4) Post-detonation surface monitoring survey. A 30-minute post-detonation surface survey must be conducted by the trained observer for scenarios A1 - A4 immediately upon conclusion of the detonation.

(5) Post-detonation aerial monitoring survey. For scenarios B1-D4, a 30-minute aerial survey must be conducted immediately upon conclusion of the detonation. For scenarios E1-E4, a 45-minute aerial survey must be conducted immediately upon conclusion of the detonation.

(6) Post-post-detonation aerial monitoring survey. Post-post-detonation aerial monitoring surveys must be conducted for scenarios C4, D2, D4, E2 and E4 within 2-7 days after detonation activities conclude, by either helicopter or fixed-wing aircraft. Observations are to start at the removal site and proceed leeward and outward of wind and current movement. Any distressed, shocked, injured or dead marine mammals will be noted in the survey report, and if possible, tracked and collected after notifying the National Marine Fisheries Service within the time requirements stated in § 216.217(f).

(7) If unforeseen conditions or events occur during an explosive severance operation that may necessitate additional monitoring not specified in this paragraph, the lead NMFS observer will contact the appropriate National Marine Fisheries Service and Minerals Management Service personnel as detailed in the Letter of Authorization for additional guidance.

(d) Holders of Letters of Authorization must conduct all monitoring and research required under the Letter of Authorization. Any monitoring or research measures proposed to be contained in a Letter of Authorization that are not specified in this subpart or not considered an emergency requirement under § 216.218(d), will first be subject to public notice and comment through publication in the Federal Register, as provided by § 216.219(c).

(e) Reporting (1) A report summarizing the results of structure removal activities, mitigation measures, monitoring efforts, and other information as required by a Letter of Authorization, must be submitted to the Director, Office of Protected Resources, within 30 days of completion of the removal activity.

(2) The National Marine Fisheries Service will accept the NMFS observer report as the activity report required by subparagraph (1) of this paragraph if all requirements for reporting contained in the Letter of Authorization are provided to the NMFS observer before the NMFS observer's report is submitted to the PROP Manager.

(3) If a marine mammal is found shocked, injured, or dead, the Holder of the Letter of Authorization, or designee, must report the incident to the National Marine Fisheries Service' Southeast Regional Office, at the earliest opportunity.

MMS and NMFS Permits, Conservation and Education Division shall ensure that operators involved in the removal of offshore structures:

1. Comply with all of the measures specified in the mitigation program for explosive severance, as developed by MMS and NMFS and modified in the Terms and Conditions of this Incidental Take Statement (see the Appendix for a description of the entire program), to avoid or minimize the impacts of structure removals on sea turtles and sperm whales.
2. Use available means after blasts to locate injured or killed sea turtles.

3. Implement measures to minimize stress and harm of sea turtles during site clearance trawling.
4. Implement steps aimed at avoiding collisions with sea turtles.

In addition, MMS shall review the activities to ascertain the need for a site-specific section 7 consultation in conjunction with site-specific NEPA reviews. Site-specific reviews should be conducted to determine whether the information contained in the biological opinion, and in MMS' Programmatic Environmental Assessment (2005), is applicable to each removal. If not, a site-specific section 7 consultation must be conducted.

Terms and Conditions

In order to be exempt from the prohibitions of section 9 of the ESA, MMS and NMFS Permits, Conservation and Education Division must comply with the following terms and conditions, which implement the reasonable and prudent measures described above and outline reporting and monitoring requirements. These terms and conditions are nondiscretionary.

To comply with Reasonable and Prudent Measure 1, MMS and NMFS Permits, Conservation and Education Division must ensure explosive-severance contractors or operators comply with all of the measures in the appropriate mitigation scenario. The mitigation scenarios shall be followed according to MMS' proposal (see Appendix F of MMS' Programmatic Environmental Assessment on the Structure-Removal Operations on the Gulf of Mexico Outer Continental Shelf) with the following changes:

- The company observers to be used for the pre-detonation and post-detonation surveys for scenarios A1, A2, A3, and A4 must have completed training in monitoring sea turtles according to MMS/NMFS training criteria.
- NMFS understands all decisions on explosive composition, configuration, and usage need to be made by the qualified explosive contractors in accordance with the applicable explosive-related laws and regulations. However, if the qualified explosive contractors find options in the amount and type of materials used, the option that would result in smaller impact areas shall be chosen.
- MMS must adjust the impact zone radii in permits and in the mitigation measures as soon as possible if field verification tests show the UWC underestimated the impact zone.
- Detonations must only occur during daylight and during a time that would allow for post-detonation surveys.
- Scare charges shall not be used to clear impact zones of sea turtles.
- Surface monitoring surveys shall be conducted from the highest vantage point(s) and/or other location(s) that provide the best, clear view of the entire impact zone. These vantage points may be on the structure being removed or proximal surface vessels such as crewboats and derrick barges.
- Flight patterns during pre-detonation and post-detonation surveys shall follow the procedures listed in Table A-2 of the Appendix. At any time during the survey period, the flight path may be altered to investigate sightings and confirm their location in reference to the impact zone.

- MMS must require operators to provide for review a plan for the use of passive acoustic monitoring for marine mammal detection in the relevant mitigation scenarios (C2, C4, D2, D4, E2, and E4). The plan may include on-site monitoring protocols, description of the passive acoustic system, software used, recording and storage of data, and other aspects of acoustic monitoring. Operators must also report on an assessment of the usefulness, effectiveness, and problems encountered with the use of the method.
- Unless other methods are available, observations during the post-post-detonation survey are to start at the removal site and proceed leeward and outward of wind and current movement. A 7nmi x 7 nmi grid centered near the removal site will be surveyed. This grid includes eight, parallel transect lines each measuring 7 nmi long and spaced approximately 1 nmi apart. Any injured or dead sea turtle or sperm whale must be recorded in the survey report and NMFS SERO must be notified. NMFS SERO may request that the carcass be tracked and collected if possible.
- If sea turtle(s) appear to remain within the impact zone of a structure to be removed using explosives, the on-site NMFS observer shall exercise discretion in the implementation of measures or modification of the mitigation program procedures that could serve to avoid or minimize impacts to sea turtle(s).
- MMS shall allow an option for trained diver(s) to attempt capture of sea turtles known to be present around a structure slated for removal by explosive severance. NMFS SERO shall be notified prior to any capture attempts and the capture, handling, holding, and release of sea turtles shall be under the guidance and supervision of NMFS observers.

To comply with Reasonable and Prudent Measure 2, MMS shall:

- Allow, when feasible, site clearance trawling to be conducted as soon as possible following detonation, to maximize the possibility of capturing killed sea turtles that sank after being killed by a blast

To implement Reasonable and Prudent Measure 3 (site-clearance trawling), MMS shall require the following measures and shall also require immediate notification if a sea turtle is captured:

- Trawl nets shall have a minimum stretched mesh size of 4 inches at the cod end and 2 inches elsewhere. Trawl nets shall have a maximum stretched mesh size of 6 inches
- Abide by maximum trawl times of 30 minutes, allowing for the removal of any captured sea turtles
- Resuscitate and release any captured sea turtles as per the guidelines described in ESA regulations at 50 CFR Part 223.206(d)(1)
- Include a description and/or identification of any sea turtles captured in the net, resuscitated, released, or killed. Since the sea turtle could have been recovered post-mortem, the description should include the animal's condition
- Trawlers must immediately contact NMFS SERO if a sea turtle is captured in the trawl net

To implement Reasonable and Prudent Measure 4 (avoiding collisions with sea turtles), MMS shall require all vessel operators associated with structure removals to implement the measures identified in NTL No. 2007-G04. If MMS finds any indications the measures provided in NTL

No. 2007-G04 are not effective, MMS shall revise the measures, as appropriate, in conference with NMFS.

MMS shall review the activities to ascertain the need for a site-specific section 7 consultation in conjunction with site-specific NEPA reviews. Site-specific reviews should be conducted to determine whether the information contained in the biological opinion, and in the programmatic environmental assessment, is applicable to each removal. If not, a site-specific section 7 consultation should be conducted. Additional reasonable and prudent measures and terms and conditions may be required for these structure removals if determined to be necessary during any site-specific section 7 consultation.

Monitoring Reports

The observers shall prepare monitoring reports (also referred to as the trip report) for each removal. For scenarios A1-A4, the company observer will be responsible for recording the data. MMS shall have the company observer prepare a monitoring report for each removal operation under scenarios A1-A4 within 30 days of completion of the severance activities. For scenarios B1-E4, the monitoring report responsibilities will be assumed by the NMFS observer. Trip reports must be submitted within the timeframe specified in the Letter of Authorization. The reports should follow a standard format, which will be determined by NMFS and MMS.Trip reports for Al-A4 scenarios will be sent to NOAA Fisheries SERO and Platform Removal Observer Program (PROP), as well as to MMS, at the following addresses:

NMFS Southeast Region
263 13th Avenue, South, St. Petersburg, FL 33701
Attention: Assistant Regional Administrator, Protected Resources Division

NMFS Galveston Laboratory
4700 Avenue U, Galveston, TX 77551
Attention: PROP Manager

In addition, MMS/NMFS must provide an annual report to NMFS SERO and NMFS Office of Protected Resources describing the total annual structures removed, sea turtle and sperm whale sightings during pre-detonation surveys, sea turtle and sperm whale sightings during post-detonation surveys, visibility during the surveys, details of sea turtles (including loggerhead, green, Kemp's ridley, hawsbill, and leatherback sea turtles) and sperm whales that were observed injured, killed, or otherwise affected and the measures taken for each sea turtle and sperm whale. These annual reports should be combined with the MMPA reporting requirements, as appropriate.

The reports shall be sent to:

NMFS Southeast Region
263 13th Avenue, South, St. Petersburg, FL 33701
Attention: Assistant Regional Administrator, Protected Resources Division

NMFS Office of Protected Resources
1315 East-West Hwy, Silver Spring, MD 20910
Attention: Director

In the event that a listed species is injured or killed during the severance operations, the detonations will cease and the observer will contact NOAA Fisheries Southeast Regional Office at 727-824-5312. If an animal does not revive, effort should be made to recover the animal in consultation with the appropriate NOAA Fisheries Stranding Coordinator. The Sea Turtle Stranding and Salvage Network can be reached at 305-361-4595, and the SERO Marine Mammal Stranding Coordinator can be reached via a 24-hour pager at 305-862-2850.

Appendix

Mitigation for Removals Using Explosive-Severance

Mitigation for Explosive-Severance Removals

Minerals Management Service (MMS) and the National Marine Fisheries Service (NMFS) developed a mitigation program for use during explosive-severance removals. Until safe and economical, non-explosive methods are developed to sever oil and gas structures from their foundations, industry will rely on explosive tools. Shaped and fracturing charge designs are being developed and refined. Such charges require smaller amounts of explosives than bulk charges. Minimizing the amount of explosives used in a removal is the first mitigation step an operator can take. Smaller amounts correspond to smaller impact zones where marine animals, such as sea turtles and marine mammals could be harmed. The mitigation requirements are less for smaller weight explosives.

The underwater detonation of these cutting tools results in the release of shock (pressure) waves and acoustic energy that has the potential to harass, injure, or kill marine protected species (MPS) such as marine mammals and sea turtles. Since the level of pressure and energy released during detonation is primarily related to the amount of the explosives used, five blasting categories were developed based upon the specific range of charge weights needed to conduct current and future outer continental shelf (OCS) decommissionings. Depending upon the design of the decommissioning target and variable marine conditions, the charges developed under each of these categories could be arranged for use in two primary configurations: below-mudline (BML) or above-mudline (AML) cutting (Figure A-1).

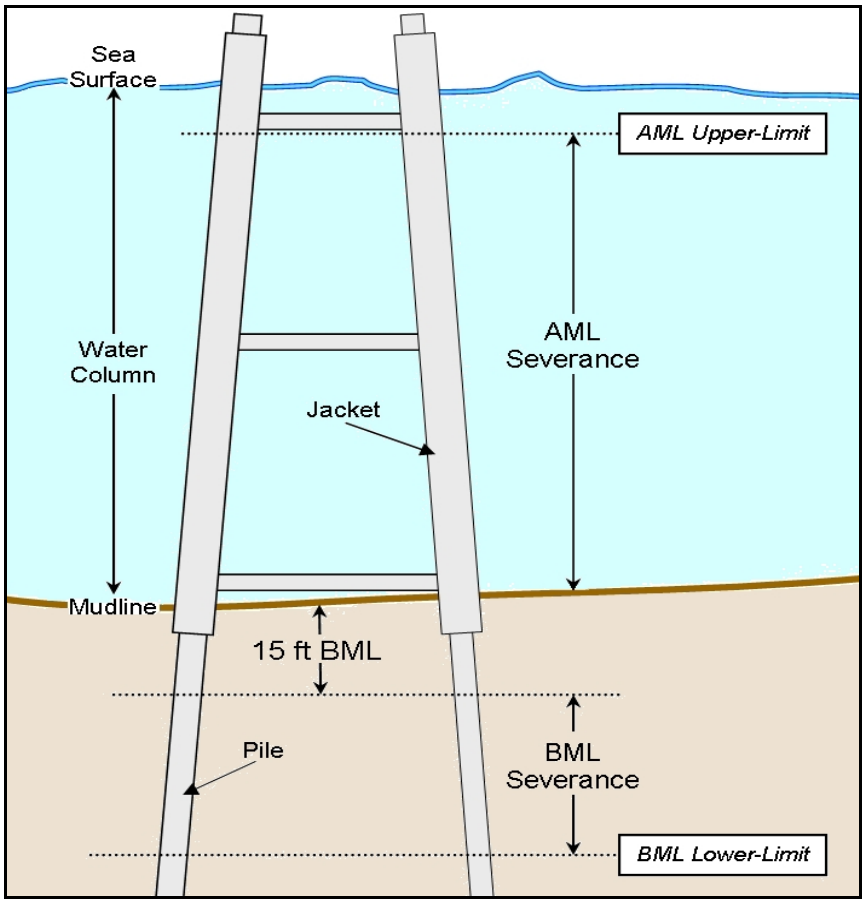

Figure A-1. Explosive-Severance Charge Configurations.

Charges configured for BML severance are generally deployed internal to the target; however, with adequate sediment jetting, external charge deployments are possible. Since they are most often conducted to conform with OCSLA requirements, BML severances range from 15 ft BML to a lower-limit dependent upon the lift vessel's ability to break suction on the severed target. Because of the closed-tubular design of most jacket assemblies, AML charges are designed for external deployment. Capable of placement at any point above the seabed, the AML upper-limit will be determined by blasting experts, considering the charge size/design and the need for human health and safety. Projected primarily for use in mid-water jacket sectioning, AML severance increases decommissioning options, but it does not negate an operator's lease responsibility or minimum cut requirements under the OCS Lands Act.

The five blasting categories (Table A-1) can also be used within two species-specific delineation zones: OCS shelf (<200 m) and OCS slope (>200 m). Because of animal distributions and densities, explosive-severance activities taking place on the shelf have a greater opportunity to impact sea turtles (i.e., green, loggerhead, leatherback, Kemp's ridley, and hawksbill) and coastal dolphin (i.e., bottlenose, Atlantic spotted, and rough-toothed). In addition to the sea turtles and coastal dolphin, explosive work in slope waters has the potential to impact deepwater dolphin (e.g., Fraser's and pan-tropical spotted) and a number of different whales (e.g., sperm and melon-headed).

Considering both charge configuration (BML/AML) and species-delineation zone (shelf/slope), MMS developed 20 specific, mitigation scenarios to address severance activities that could be conducted under the five blasting categories (Table A-1). Operators applying to MMS for structure-removal permits using explosive severance would indicate the appropriate scenario based upon the removal location and their severance needs. In addition to other application data, the noted scenario requirements would be considered during subsequent National Environmental Policy Act analyses and under the Endangered Species Act, if appropriate.

The monitoring requirements and methodologies for the 20 scenarios were developed in coordination with explosive-severance experts and protected species scientists from NMFS and MMS, taking into consideration MPS characteristics and surfacing rates and calculated impact parameters. While charge criteria and reporting requirements are standard for all scenarios, the individual survey requirements and requisite times vary. General descriptions of the charge criteria, monitoring terms/methods, and reporting requirements are provided below. The specific survey, time, and methodology requirements for each explosive-severance scenario follow. The mitigation will be integrated into MMS' removal-permitting process and conveyed to operators as conditions of permit approval.

General Requirements

Charge Criteria

The charge criteria discussed below (e.g., charge size, detonation staggering, and explosive material) are applicable for all of the explosive-severance scenarios conducted under the proposed action.

Charge Size (All Scenarios)

The options available under the multiple explosive-severance scenarios allow for the development of any size charge between 0 and 500 lb. Most often determined in the early planning stages, the final/actual charge weight establishes the specific mitigation scenario that must be adhered to as a permit condition. Charges greater than 500 lb are prohibited and their proposed usage will require additional NEPA analyses and site-specific MMPA authorization and ESA consultation.

Table A-1. Blasting Categories and Associated Mitigation Scenarios

Blasting Category	Configuration *(Charge Range)*	Impact-Zone Radius	Species-Delineation Zone	Mitigation Scenario
Very-Small Blasting	BML *(0-10 lb)*	261 m (856 ft)	Shelf (<200 m)	A1
			Slope (>200 m)	A2
	AML *(0-5 lb)*	293 m (961 ft)	Shelf (<200 m)	A3
			Slope (>200 m)	A4
Small Blasting	BML *(>10-20 lb)*	373 m (1,224 ft)	Shelf (<200 m)	B1
			Slope (>200 m)	B2
	AML *(>5-20 lb)*	522 m (1,714 ft)	Shelf (<200 m)	B3
			Slope (>200 m)	B4
Standard Blasting	BML *(>20-80 lb)*	631 m (2,069 ft)	Shelf (<200 m)	C1
			Slope (>200 m)	C2
	AML *(>20-80 lb)*	829 m (2,721 ft)	Shelf (<200 m)	C3
			Slope (>200 m)	C4
Large Blasting	BML *(>80-200 lb)*	941 m (3,086 ft)	Shelf (<200 m)	D1
			Slope (>200 m)	D2
	AML *(>80-200 lb)*	1,126 m (3,693 ft)	Shelf (<200 m)	D3
			Slope (>200 m)	D4
Specialty Blasting	BML *(>200-500 lb)*	1,500 m (4,916 ft)	Shelf (<200 m)	E1
			Slope (>200 m)	E2
	AML *(>200-500 lb)*	1,528 m (5,012 ft)	Shelf (<200 m)	E3
			Slope (>200 m)	E4

Detonation Staggering (All Scenarios)

Multiple charge detonations shall be staggered at an interval of 0.9 sec (900 msec) between blasts to prevent an additive pressure event. For decommissioning purposes, a “multiple charge detonation” refers to any configuration where more than one charge is required in a single detonation “event.”

Explosive Material (All Scenarios)

There are many important properties (e.g., velocity, brisance, specific-energy) related to the explosive material(s) used in developing severance charges. Material needs vary widely depending upon target characteristics, marine conditions, and charge placement. Since specific material and personnel safety requirements must be established and followed, all decisions on explosive composition, configuration, and usage should be made by the qualified (i.e., licensed and permitted) explosive contractors in accordance with the applicable explosive-related laws and regulations.

If the qualified explosive contractors find options in the amount and type of materials used, the option that would result in smaller impact areas should be chosen.

Monitoring Terms and Methods

The following monitoring terms are general descriptions of the terminology applicable to all explosive-severance activities. The monitoring methods are observation activities (i.e., visual or electronic surveys) designed to detect MPS in the vicinity of decommissioning operations. The requisite survey(s) and related time-period(s) will vary depending upon the nature of the severance-scenario.

Impact Zone (Term; All Scenarios)

The impact zone is the area, marked by the horizontal radius around a decommissioning target, in which an MPS could be affected by the pressure and/or acoustic energy released during the detonation of an explosive-severance charge. As discussed in Appendix E of MMS' Environmental Assessment, the impact zone radii were derived using conservative pressure/energy propagation data from Applied Research Associates, Inc.'s UnderWater Calculator (UWC). The monitoring surveys and associated time periods are designed to allow for adequate detection of MPS that may be present within each impact zone based upon potential species and the overall size of the impact area. If MPS are detected within the impact zone, a detonation must not proceed. The mitigation scenarios are designed to prevent MPS from exposure to the high levels of pressure or acoustic energy. Steps for tracking animals and additional monitoring are detailed in each of the scenarios.

MMS must adjust the impact zone radii if field verification tests show the UWC underestimated the impact zone. Field verification tests should be completed, data analyzed, and impact zones adjusted as necessary before large and specialty blasts (explosives greater than 80 lbs).

Predetonation Survey (Term; All Scenarios)

A predetonation (pre-det) survey refers to any MPS monitoring survey (surface, aerial, or acoustic) conducted prior to the detonation of any explosive severance tool. The primary purpose of pre-det surveys is to allow detection of any MPS within the scenario-specific impact zone and to continue monitoring the animal(s) until it leaves the area or wait for the allotted time period.

Postdetonation Survey (Term; All Scenarios)

A postdetonation (post-det) survey refers to any MPS monitoring survey (surface, aerial, or post-post-det aerial) conducted after the detonation "event" occurs. The primary purpose of post-det surveys is to detect any MPS that may have been impacted (stunned, injured, or killed) by the detonation and resultant pressure/energy release. The post-det surveys are key in providing essential reporting information on the effectiveness of the pre-det survey efforts.

Waiting Period (Term; All Scenarios)

Variable by scenario, the waiting period refers to the time in which detonation operations must hold before the requisite monitoring survey(s) can be reconducted. The purpose of a waiting period is to allow any inbound or previously detected outbound MPS to exit the impact zone under their own volition.

Company Observer (Term; Scenarios A1- A4 Only)

Trained company observers will be allowed to perform protected species detection surveys for Very-Small blasting scenarios A1-A4. An "adequately-trained" observer is an employee of the company or severance contractor who has attended observer training courses offered by private or government entities in accordance with MMS/NMFS training criteria. Companies will be required to provide copies of personnel training certifications to MMS' Gulf of Mexico Region Office prior to conducting A1-A4 removal operations.

NMFS Observer (Term; B1-E4)

NMFS observers are required to perform MPS detection surveys for blasting scenarios B1 to E4. These observers are qualified NMFS employees or contractors delegated under the Platform Removal Observer Program (PROP) of NMFS' Galveston Laboratory. Generally, two observers will be assigned to each operation for detection survey duties. However, because mitigation-scenarios C2, C4, D2, D4, E2, and E4 require a minimum of three (3) observers for the simultaneous surface, aerial, and acoustic surveys, at least two (2) "teams" of observers will be required. The PROP Manager will determine each "team" size depending upon the nature of the operations, target structure configuration, support vessel accommodations, and other environmental monitoring conditions.

Surface Monitoring Survey *(Method; All Scenarios)*

Surface monitoring surveys are to be conducted from the highest vantage point(s) and/or other location(s) that provide the best, clear view of the entire impact zone. These vantage points may be on the structure being removed or proximal surface vessels such as crewboats and derrick barges. Surface surveys will be restricted to daylight hours only, and the monitoring will cease upon inclement weather or when it is determined that marine conditions are not adequate for visual observations.

Aerial Monitoring Survey *(Method; Scenarios B1-E4)*

Aerial monitoring surveys are to be conducted from helicopters running low-altitude search patterns over the extent of the potential impact area. Aerial surveys will be restricted to daylight hours only, and they cannot begin until the requisite surface monitoring survey has been completed. Aerial surveys will cease upon inclement weather, when marine conditions are not adequate for visual observations, or when the pilot/removal supervisor determines that helicopter operations must be suspended. Aerial surveys are required for all severance scenarios with the exception of scenarios A1-A4.

A trained observer should sit in one of the seats in the front of the cockpit. This is typically on the port side of the aircraft next to the pilot. Whenever possible, a second observer should sit on the opposite side of the aircraft so that both sides of the aircraft are surveyed. If additional observers are available, seating should be adjacent to a window. Communications equipment should be provided which allows the pilot and observers to talk to each other and which provides clear communications. Table A-2 describes the patterns of flight for segments of 30, 45, 60, and 90-minute surveys.

For post-detonation surveys, the beginning of the post-detonation survey should generally concentrate on the area near the center of the impact zone for the first 5-10 minutes. Remaining time should cover the entire impact zone using expanding and contracting circles as in the pre-detonation 30 minute aerial survey. The area around the center of the impact zone should be surveyed repeatedly. If strong currents are present, the downcurrent area should be surveyed outside the impact zone to an appropriate distance for a reasonable period of time. This will vary with the size of the impact zone. In the absence of strong currents, follow the protocol for the pre-detonation 30 minute surveys except that any or all of the 5 min survey designated to be conducted outside the impact zone may be redirected to the area inside the impact zone depending on the situation.

Table A-2. Flight patterns during pre-detonation surveys. All surveys should begin at the center of the impact zone. At any time during the entire survey period it may be necessary to alter the flight path to investigate sightings and confirm their location in reference to the impact zone.

Flight Path	30-minute	45-minute	60-minute	90-minute
The flight path should follow gradually expanding circles ("spiraling or corkscrewing") out from the center of the impact zone to the perimeter of the impact zone. This should be followed by gradually contracting circles until the aircraft returns to the center of the impact zone (the structure being removed). Repeat the pattern for the specified time period.	10 minutes	20 minutes	25 minutes	40 minutes
The aircraft should survey outside of the impact zone to a distance approximately equal to the radius of the impact zone to determine if any protected species (sea turtles or marine mammals) might be moving into the area. Expanding and contracting circles should again be used for the flight path.	5 minutes	5 minutes	5 minutes	5 minutes
The aircraft should survey inside the impact zone and follow the same procedures as during the first part of the survey. However, near the end of the survey period the flight path should usually be concentrated near the center of the impact zone since this is where animals will have the highest risk of severe impact.	15 minutes	20 minutes	30 minutes	45 minutes

Acoustic Monitoring Survey (Method; Scenarios C2, C4, D2, D4, E2, and E4)

Acoustic monitoring surveys are required to be conducted on all Standard, Large, and Specialty blasting scenarios conducted on slope (>200 m) activities (C2, C4, D2, D4, E2, and E4). Contractors conducting acoustic surveys will be required to use NOAA-approved passive acoustic monitoring protocols, devices, and technicians. Acoustic surveys will be run concurrent with requisite pre-det surveys; beginning with the surface observations and concluded at the finish of the aerial surveys when the detonation(s) is allowed to proceed. If feasible, passive-acoustic monitoring should be continued until the end of the post-det monitoring period. If any MPS are detected acoustically, the contractor will immediately contact surface and aerial observers to alert them on the presence of MPS individuals.

Given that passive acoustic monitoring devices are not available at the time of this writing, operators must provide a plan for the use of passive acoustic monitoring for marine mammal detection in the relevant mitigation scenarios (C2, C4, D2, D4, E2, and E4) to MMS for review. The plan may include on-site monitoring protocols, description of the passive acoustic system, software used, recording and storage of data, and other aspects of acoustic monitoring. Operators must also report on an assessment of the usefulness, effectiveness, and problems encountered with the use of the method.

Post-Post-Det Aerial Monitoring Survey (Method; Scenarios C4, D2, D4, E2, and E4)

Post-post-det aerial monitoring surveys will be conducted within 2 to 7 days after detonation activities conclude, by either helicopter or fixed-wing aircraft. When detailed current data are available, observations are to start at the removal site and proceed leeward and outward of wind and current movement. A 7 nmi x 7 nmi grid centered near the removal site will be surveyed. This grid includes eight, parallel transect lines each measuring 7 nmi long and spaced approximately 1 nmi apart. Any injured or killed MPS must be noted in the survey report. NMFS SERO must be notified. If possible, NMFS SERO may request that the carcass be tracked and collected. Post-post-det aerial surveys are only required for mitigation-scenarios C4, D2, D4, E2, and E4.

Reporting Requirements

All explosive-severance activities in the GOM are subject to the reporting requirements listed in this section. The information collected under these requirements will be used by MMS and NMFS to continually assess mitigation effectiveness and the level of MPS impacts.

Reporting Responsibilities and Filing Times

The observers shall prepare monitoring reports (also referred to as the trip report) for each removal. For scenarios A1-A4, the company observer will be responsible for recording the data. MMS shall have the company observer prepare a monitoring report for each removal operation under scenarios A1-A4 within 30 days of completion of the severance activities. For scenarios B1-E4, the monitoring report responsibilities will be assumed by the NMFS observer. Trip reports must be submitted within the timeframe specified in the Letter of Authorization. Trip reports for Al-A4 scenarios will be sent to NOAA Fisheries SERO and PROP, as well as to MMS, at the following addresses:

NMFS Southeast Region
263 13th Avenue, South, St. Petersburg, FL 33701
Attention: Assistant Regional Administrator, Protected Resources Division

NMFS Galveston Laboratory
4700 Avenue U, Galveston, TX 77551
Attention: PROP Manager

In addition, MMS/NMFS must provide an annual report to NMFS SERO and NMFS Office of Protected Resources describing the total annual structures removed, sea turtles sightings during pre-detonation surveys, sea turtles sightings during post-detonation surveys, visibility during the surveys, details of sea turtles that were observed injured, killed, or otherwise affected and the measures taken for each sea turtle. These annual reports should be combined with the MMPA reporting requirements, as appropriate.

The reports shall be sent to:

NMFS Southeast Region
263 13th Avenue, South, St. Petersburg, FL 33701
Attention: Assistant Regional Administrator, Protected Resources Division

NMFS Office of Protected Resources
1315 East-West Hwy, Silver Spring, MD ZIP
Attention: Director

MMS Gulf of Mexico Region
1201 Elmwood Park Blvd, New Orleans, LA 70123-2394
Attention:Regional Supervisor, Office of Leasing & Environment

Information Requirements

In addition to basic operational data (e.g., area and block, water depth, company/platform information), the trip reports must contain all of the applicable information listed in Table A-3.

Table A-3. Minimum Information Requirements for Explosive-Severance Monitoring Reports

Information Type	Details
Target	• Type/Composition – pile, caisson, concrete piling, nylon mooring, etc. • Diameter and thickness
Charge	• Type – bulk, configured-bulk, linear-shaped, etc. • Charge weight/material – RDX, C4, HMX, etc. • Configuration – internal/external, cut depth (BML), water depth (AML), etc. • Deployment method – diver, ROV, from surface, etc.
Monitoring	• Survey Type – pre-det and post-det; surface, aerial, etc. • Time(s) initiated/terminated • Marine Conditions
Observed/Detected MPS	• Type/number – basic description or species identification (if possible) during all survey types (surface, aerial, and acoustic and both during pre- and post-detonation periods) • Location/orientation – inside/outside impact zone, inbound/outbound, etc. • Any "halted-detonation" details – i.e., waiting periods, re-surveys, etc. • Any "Take-Event" details – actual MPS injury/mortality

Take-Event Procedures

In the event that an MPS is shocked, injured, or killed during the severance activities, the operations will cease and the observer will contact MMS at (504) 736-3245 and NMFS' Southeast Regional Office (SERO) at (727) 824-5312. As noted above, details concerning the take event are required to be recorded in the trip report. If the animal does not revive, effort should be made to recover the carcass in consultation with the appropriate NOAA Fisheries' Stranding Coordinator. The Sea Turtle Stranding and Salvage Network can be reached at (305) 362-4595, and the SERO Marine Mammal Stranding Coordinator can be reached via a 24-hour pager at (305) 862-2850. As noted above, details concerning the take event are required to be recorded in the trip report.

Specific Requirements

As noted, the charge criteria and reporting requirements listed above will be standard for all decommissionings employing explosive-severance activities. However, depending upon the severance scenario, there are six different MPS monitoring surveys that could be conducted before and after all detonation events. The specific monitoring requirements, survey times, and impact zone radii for all explosive-severance scenarios are summarized in Table A-4.

Accounting for similar pre- and post-det surveys, the 20 explosive-severance scenarios correspond roughly with 8 basic mitigation processes that vary only in differences in impact zone ranges and survey times. The survey-time requisites were established by NMFS and MMS protected species scientists, taking into consideration likely MPS and their surfacing rates. The mitigation process details for each of the explosive-severance scenarios follows.

Table A-4: Blast Categories, Mitigation Scenarios, Survey and Time Requirements For All Explosive-Severance Scenarios.

Blasting Category	Configuration (Charge wt/ placement)	Species Delineation Zone	Mitgation Scenario	Impact Zone Radius	Pre-Det Surface Survey (min)	Pre-Det Aerial Survey (min)	Pre-Det Acoustic Survey (min)	Post-Det Surface Survey (min)	Post-Det Aerial Survey (min)	Post-Post-Det Aerial Survey (Yes/No)	Waiting Period (min)
Very-Small	BML *(0-10 lb)*	Shelf (<200 m)	A1	261 m (856 ft)	60	N/A	N/A	30	N/A	No	30
		Slope (>200 m)	A2		90	N/A	N/A	30	N/A	No	30
	AML *(0-5 lb)*	Shelf (<200 m)	A3	293 m (961 ft)	60	N/A	N/A	30	N/A	No	30
		Slope (>200 m)	A4		90	N/A	N/A	30	N/A	No	30
Small	BML *(>10-20 lb)*	Shelf (<200 m)	B1	373 m (1,224 ft)	90	30	N/A	N/A	30	No	30
		Slope (>200 m)	B2		90	30	N/A	N/A	30	No	30
	AML *(>5-20 lb)*	Shelf (<200 m)	B3	522 m (1,714 ft)	90	30	N/A	N/A	30	No	30
		Slope (>200 m)	B4		90	30	N/A	N/A	30	No	30
Standard	BML *(>20-80 lb)*	Shelf (<200 m)	C1	631 m (2,069 ft)	90	30	N/A	N/A	30	No	30
		Slope (>200 m)	C2		90	30	120	N/A	30	No	30
	AML *(>20-80 lb)*	Shelf (<200 m)	C3	829 m (2,721 ft)	90	45	N/A	N/A	30	No	30
		Slope (>200 m)	C4		90	60	150	N/A	30	Yes	45
Large	BML *(>80-200 lb)*	Shelf (<200 m)	D1	941 m (3,086 ft)	120	45	N/A	N/A	30	No	30
		Slope (>200 m)	D2		120	60	180	N/A	30	Yes	45
	AML *(>80-200 lb)*	Shelf (<200 m)	D3	1,126m (3,693ft)	120	60	N/A	N/A	30	No	30
		Slope (>200 m)	D4		150	60	210	N/A	30	Yes	45
Specialty	BML *(>200-500 lb)*	Shelf (<200 m)	E1	1,500 m (4,916 ft)	150	90	N/A	N/A	45	No	45
		Slope (>200 m)	E2		180	90	270	N/A	45	Yes	45
	AML *(>200-500 lb)*	Shelf (<200 m)	E3	1,528 m (5,012 ft)	150	90	N/A	N/A	45	No	45
		Slope (>200 m)	E4		180	90	270	N/A	45	Yes	45

Very-Small Blasting Category

Shelf (<200 m) and Slope (>200 m) Scenarios A1, A2, A3, and A4

An operator proposing explosive-severance activities conducted under the very-small blasting category will be limited to 5-lb (AML) and 10-lb (BML) charge sizes and conduct all requisite monitoring during daylight hours out to the associated impact-zone radii listed below:

A1 and A2: 261 m (856 ft)
A3 and A4: 293 m (961 ft)

Required Observers

Owing to the small impact zone and in an effort to encourage industry to develop and use smaller/more effective cutting charges, company observers would be allowed to conduct the MPS monitoring for all of the very-small blasting scenarios. To qualify as an "adequately trained" observer, operator/contractor personnel must attend observer training courses offered by private or government entities in accordance with MMS/NMFS training criteria. In addition to meeting all monitoring and reporting requirements, company observers would:

- Brief appropriate crew of the monitoring efforts and notify topsides personnel to report any sighted MPS to the observer or company representative immediately;
- Establish an active line of communication (i.e., 2-way radio, visual signals, etc.) with blasting personnel; and
- Devote the entire, uninterrupted survey time to MPS monitoring and not secondary tasking.

Pre-Det Monitoring

Before severance charge detonation, the company observer will conduct a 60 min (Scenarios A1 and A3) or 90 min (Scenarios A2 and A4) **surface monitoring survey** of the impact zone. The monitoring will be conducted from the highest highest vantage point(s) and/or other location(s) that provide the best, clear view of the entire impact zone. These vantage points may be on the structure being removed or proximal surface vessels such as crewboats and derrick barges. If during the survey MPS are:

1. **Not sighted inside OR sighted outside the impact zone (and not inbound)**, proceed with the detonation;
2. **Sighted inside the impact zone and, upon completion of the surface survey, re-sighted outside the impact zone immediately prior to detonation**, proceed with the detonation to avoid reentry;
3. **Sighted inside the impact zone and, upon completion of the surface survey, NOT re-sighted outside the impact zone,**
    a. Halt the detonation,
    b. Wait 30 min while continuing to monitor opportunistically, and
    c. Reconduct a 30 min surface monitoring survey; or
4. **Sighted outside the impact zone and moving inbound,**
    a. Halt the detonation,
    b. Wait 30 min while continuing to monitor opportunistically, and
    c. Reconduct a 30 min surface monitoring survey.

Post-Det Monitoring

After severance charge detonation, the company observer will conduct a 30 min **surface monitoring survey** of the impact zone to detect for impacted MPS. If an MPS is observed shocked, injured, or killed, the detonations will cease, attempts should be made to collect/resuscitate the animal, and the observers will contact MMS and NMFS as per the take event procedures described on page 9 of this appendix. If no MPS are observed to be impacted by the detonation, the observer is to record all of the necessary information as per the conditions detailed in MMS's permit approval letter (i.e., MMPA/ESA incidental-take requirements) and prepare a trip report for routing to MMS and NMFS.

A flowchart of the monitoring process and associated survey times for very-small severance-scenarios A1, A2, A3, and A4 is provided in Figure A-2.

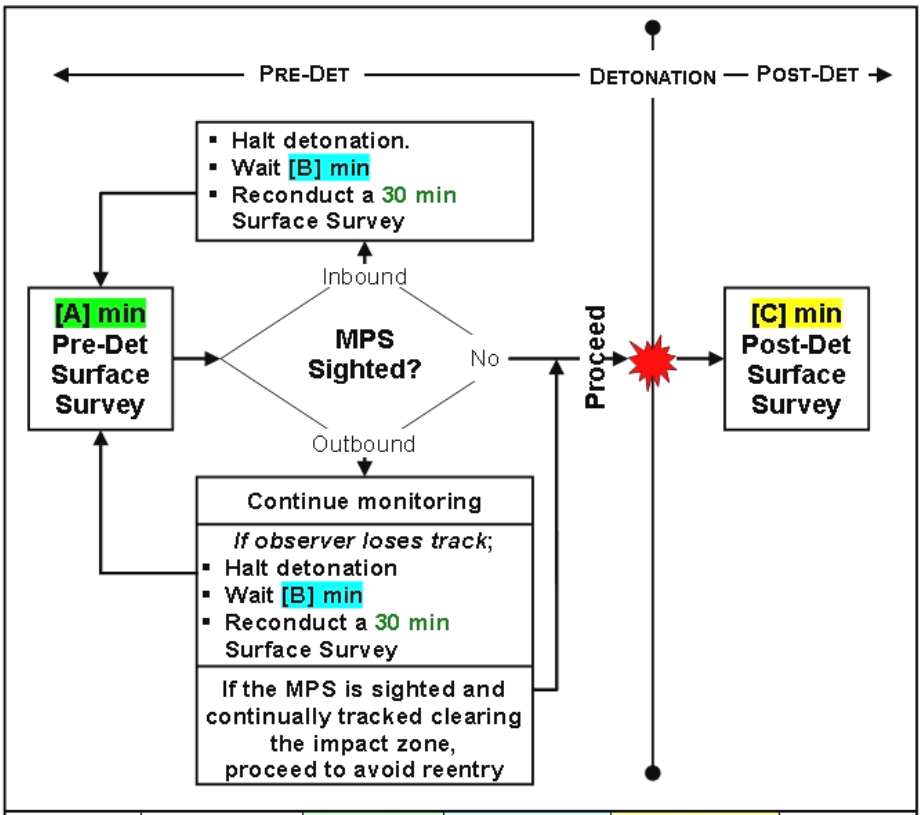

Scenario	Pre-Det Surface [A]	Waiting Period [B]	Post-Det Surface [C]
	(Minutes)		
A1	60	30	30
A2	90	30	30
A3	60	30	30
A4	90	30	30

Figure A-2. Surveys, time requisites, and monitoring process for very-small severance-scenarios A1, A2, A3, and A4.

Small Blasting Category

Shelf (<200 m) and Slope (>200 m) Scenarios B1, B2, B3, and B4

An operator proposing explosive-severance activities conduced under the small blasting category will be limited to 20-lb charge sizes (AML or BML) and conduct all requisite monitoring during daylight hours out to the associated impact-zone radii listed below:

B1 and B2:	373 m (1,224 ft)
B3 and B4:	522 m (1,714 ft)

Required Observers

Generally, two NMFS observers are required to perform MPS detection surveys for small-blasting scenarios. If necessary, the PROP Manager will determine if additional observers are required to compensate for the complexity of severance activities and or structure configuration. In addition to meeting all reporting requirements, the NMFS observers would:

- Brief affected crew and severance contractors of the monitoring efforts and notify topsides personnel to report any sighted MPS to the observer or company representative immediately;
- Establish an active line of communication (such as 2-way radio) with company and blasting personnel; and
- Devote the entire, uninterrupted survey time to MPS monitoring.

Pre-Det Monitoring

Before severance charge detonation, NMFS observer(s) will conduct a 60 min (B1 and B3) or 90 min (B2 and B4) **surface monitoring survey** of the impact zone. The monitoring will be conducted from the highest vantage point(s) and/or other location(s) that provide the best, clear view of the entire impact zone. These vantage points may be on the structure being removed or proximal surface vessels such as crewboats and derrick barges. Once the surface monitoring is complete (i.e., the impact zone cleared of MPS), NMFS observer(s) will conduct a 30 min **aerial monitoring survey** by helicopter. When two NMFS observers are on site, NMFS may decide to have both observers fly the aerial survey or have one observer continue surface monitoring while the other observer flies the survey. The helicopter will traverse the impact zone at low speed/altitude in the specified pattern (Table A-2 on page 6).

If during the **surface survey** MPS are:

1. **Not sighted inside OR sighted outside the impact zone (and not inbound)**, proceed with the aerial survey;
2. **Sighted inside the impact zone and subsequently re-sighted outside the impact zone**, proceed with the aerial survey**;**
3. **Sighted inside the impact zone and NOT subsequently re-sighted outside the impact zone,**
    a. Halt initiation of aerial survey,
    b. Conduct an additional surface survey equal to the waiting period specified in Table A-4 with a start time of the last MPS sighting recorded inside the impact zone; or
4. **Sighted outside the impact zone and moving inbound,**
    a. Halt initiation of aerial survey,

b. Conduct an additional surface survey equal to the waiting period specified in Table A-4 with a start time of the last MPS sighting recorded inbound.

If during the **aerial survey** MPS are:

1. **Not sighted or sighted outside the impact zone (and not inbound)**, proceed with the detonation;
2. **Sighted inside the impact zone and, upon completion of the aerial survey, re-sighted outside the impact zone**, proceed with the detonation to avoid reentry**;**
3. **Sighted inside the impact zone and, upon completion of the aerial survey, NOT re-sighted outside the impact zone,**
   a. Halt the detonation,
   b. Monitor opportunistically for the waiting period specified in Table A-4 with a start time of the last MPS sighting recorded inside the impact zone; and
   c. Reconduct the entire **aerial monitoring survey**; or
4. **Sighted outside the impact zone and moving inbound,**
   a. Halt the detonation,
   b. Monitor opportunistically for the waiting period specified in Table A-4 with a start time of the last MPS sighting recorded inbound; and
   c. Reconduct the entire aerial monitoring survey.

Post-Det Monitoring

After severance charge detonation, the NMFS observers will conduct a 30 min **aerial monitoring survey** of the impact zone to detect for impacted MPS. If an MPS is observed shocked, injured, or killed, the operations will cease, attempts will be made to collect/resuscitate the animal, and NMFS SERO will be contacted as per the take event procedures described on page 9 of this appendix. If no MPS are observed to be impacted by the detonation, the NMFS observers will record all of the necessary information as per the conditions detailed in MMS's permit approval letter and PROP guidelines for the preparation of a trip report.

A flowchart of the monitoring process and associated survey times for small severance-scenarios B1, B2, B3, and B4 is provided in Figure A-3.

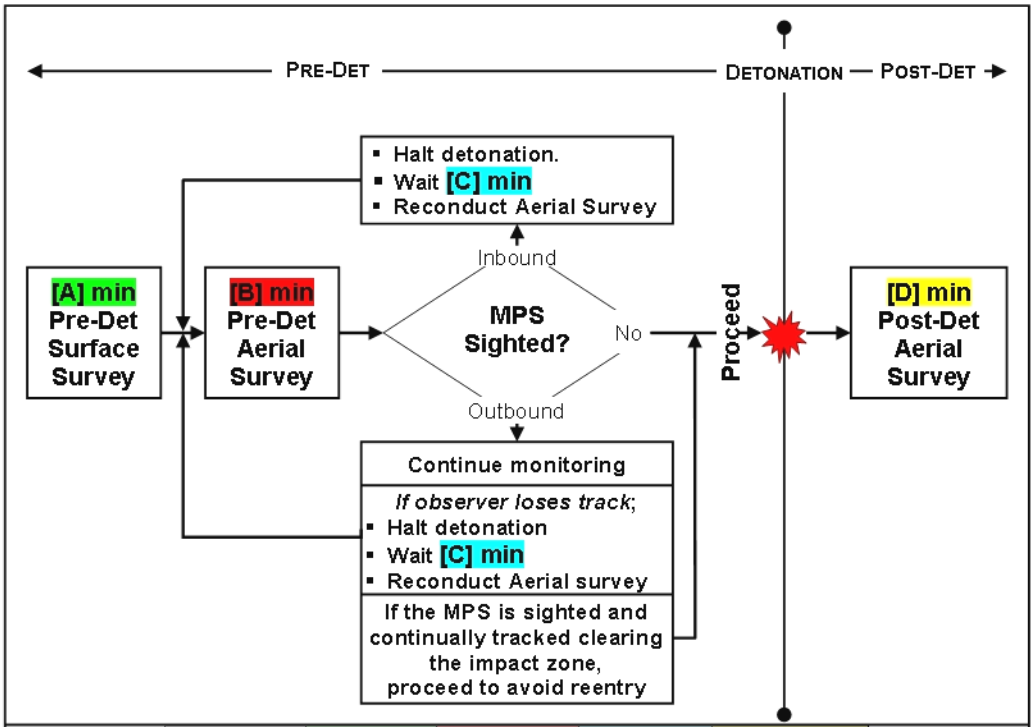

Scenario	Pre-Det Surface [A]	Pre-Det Aerial [B]	Waiting Period [C]	Post-Det Aerial [D]
	(Minutes)			
B1	60	30	30	30
B2	90	30	30	30
B3	60	30	30	30
B4	90	30	30	30

Figure A-3. Surveys and monitoring process for small severance-scenarios B1, B2, B3, and B4.

Standard Blasting Category

Shelf (<200 m) Scenarios C1 and C3

An operator proposing shelf-based (<200 m), explosive-severance activities conduced under the standard blasting category will be limited to 80-lb charge sizes (BML or AML) and conduct all requisite monitoring during daylight hours out to the associated impact-zone radii listed below:

C1: 631 m (2,069 ft)
C3: 829 m (2,721 ft)

Required Observers

Generally, two NMFS observers are required to perform MPS detection surveys for standard-blasting, shelf scenarios C1 and C3. If necessary, the PROP Manager will determine if additional observers are required to compensate for the complexity of severance activities and or structure configuration. In addition to meeting all reporting requirements, the NMFS observers would:

- Brief affected crew and severance contractors of the monitoring efforts and notify topsides personnel to report any sighted MPS to the observer or company representative immediately;
- Establish an active line of communication (such as 2-way radio) with company and blasting personnel; and
- Devote the entire, uninterrupted survey time to MPS monitoring.

Pre-Det Monitoring

Before severance charge detonation, NMFS observer(s) will conduct a 90 min **surface monitoring survey** of the impact zone. The monitoring will be conducted from the highest vantage point(s) and/or other location(s) that provide the best, clear view of the entire impact zone. These vantage points may be on the structure being removed or proximal surface vessels such as crewboats and derrick barges. Once the surface monitoring is complete (i.e., the impact zone cleared of MPS), NMFS observer(s) will conduct the **aerial monitoring survey** by helicopter for 30 min (Scenario C1) or 45 min (Scenario C3). When two NMFS observers are on site, NMFS may decide to have both observers fly the aerial survey or have one observer continue surface monitoring while the other observer flies the survey. The helicopter will traverse the impact zone at low speed/altitude in the specified pattern (Table A-2 on page 6).

If during the **surface survey** MPS are:

1. **Not sighted inside OR sighted outside the impact zone (and not inbound)**, proceed with the aerial survey;
2. **Sighted inside the impact zone and subsequently re-sighted outside the impact zone**, proceed with the aerial survey**;**
3. **Sighted inside the impact zone and NOT subsequently re-sighted outside the impact zone,**
    a. Halt initiation of aerial survey,
    b. Conduct an additional surface survey equal to the waiting period specified in Table A-4 with a start time of the last MPS sighting recorded inside the impact zone; or
4. **Sighted outside the impact zone and moving inbound,**
    a. Halt initiation of aerial survey,

b. Conduct an additional surface survey equal to the waiting period specified in Table A-4 with a start time of the last MPS sighting recorded inbound.

If during the **aerial survey** MPS are:

1. **Not sighted or sighted outside the impact zone (and not inbound)**, proceed with the detonation;
2. **Sighted inside the impact zone and, upon completion of the aerial survey, re-sighted outside the impact zone**, proceed with the detonation to avoid reentry**;**
3. **Sighted inside the impact zone and, upon completion of the aerial survey, NOT re-sighted outside the impact zone,**
   a. Halt the detonation,
   b. Monitor opportunistically for the waiting period specified in Table A-4 with a start time of the last MPS sighting recorded inside the impact zone; and
   c. Reconduct the entire **aerial monitoring survey**; or
4. **Sighted outside the impact zone and moving inbound,**
   a. Halt the detonation,
   b. Monitor opportunistically for the waiting period specified in Table A-4 with a start time of the last MPS sighting recorded inbound; and
   c. Reconduct the entire **aerial monitoring survey**.

Post-Det Monitoring

After severance charge detonation, the NMFS observers will conduct a 30 min **aerial monitoring survey** of the impact zone to detect for impacted MPS. If an MPS is observed shocked, injured, or killed, the operations will cease, attempts will be made to collect/resuscitate the animal, and NMFS SERO will be contacted as per the take event procedures described on page 9 of this appendix. If no MPS are observed to be impacted by the detonation, the NMFS observers will record all of the necessary information as per the conditions detailed in MMS's permit approval letter and PROP guidelines for the preparation of a trip report.

A flowchart of the monitoring process and associated survey times for standard severance-scenarios C1 and C3 is provided in Figure A-4.

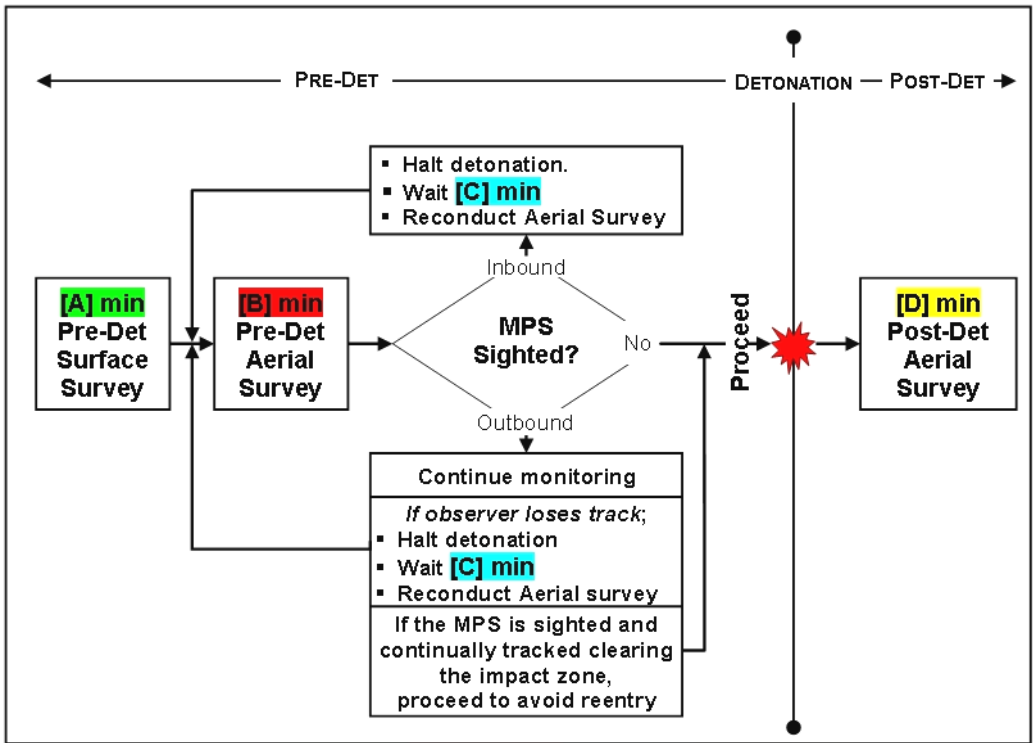

Scenario	Pre-Det Surface [A]	Pre-Det Aerial [B]	Waiting Period [C]	Post-Det Aerial [D]
	(Minutes)			
C1	90	30	30	30
C3	90	45	30	30

Figure A-4. Surveys and monitoring process for standard severance-scenarios C1 and C3.

Slope (>200 m) Scenarios C2 and C4

An operator proposing slope-based (>200 m), explosive-severance activities conduced under the standard blasting category will be limited to 80-lb charge sizes (BML or AML) and conduct all requisite monitoring during daylight hours out to the associated impact-zone radii listed below:

C2: 631 m (2,069 ft)
C4: 829 m (2,721 ft)

Required Observers

Since standard-blasting, slope scenarios require a minimum of three (3) NMFS observers (PROP or contracted personnel) for the simultaneous surface, aerial, and acoustic monitoring surveys, at least two (2) "teams" of observers will be required. The PROP Manager will determine each "team" size depending upon the complexity of severance activities and or structure configuration. In addition to meeting all reporting requirements, the NMFS observers would:

- Brief affected crew and severance contractors of the monitoring efforts and notify topsides personnel to report any sighted MPS to the observer or company representative immediately;
- Establish an active line of communication (such as 2-way radio) with company, blasting, and acoustic monitoring personnel; and
- Devote the entire, uninterrupted survey time to MPS monitoring.

Pre-Det Monitoring

Before severance charge detonation, NMFS observers will begin a 90 min **surface monitoring survey** and a 120 min (Scenario C2) or 150 min (Scenario C4) **passive-acoustic monitoring survey** of the impact zone. The surface monitoring will be conducted from the highest vantage point(s) and/or other location(s) that provide the best, clear view of the entire impact zone. These vantage points may be on the structure being removed or proximal surface vessels such as crewboats and derrick barges. The acoustic monitoring will be conducted using NOAA-approved passive-acoustic monitoring protocols, devices, and technicians. Once the surface monitoring is complete (i.e., the impact zone cleared of MPS), the acoustic survey will continue while one or two of the NMFS observers transfer to a helicopter to conduct a 30 min (Scenario C2) or 60 min (Scenario C4) **aerial monitoring survey**. The PROP Manager may decide to have both observers fly the aerial survey or have one observer continue surface monitoring while the other observer flies the survey. The helicopter will traverse the impact zone at low speed/altitude in the specified pattern (Table A-2 on page 6).

If during the **surface survey** MPS are:

1. **Not sighted inside the impact zone OR sighted outside the impact zone (and not inbound) AND not detected (acoustically)** proceed with the aerial survey;
2. **Sighted inside the impact zone and subsequently re-sighted outside the impact zone AND not detected (acoustically)**, proceed with the aerial survey**;**
3. ***Sighted inside the impact zone and, upon completion of the surface survey, NOT re-sighted outside the impact zone,**
    a. Halt initiation of aerial survey,

* Procedures for acoustic detections in steps 3 and 4 will be determined in the passive acoustic monitoring plan.

b. Conduct an additional surface survey equal to the waiting period specified in Table A-4 with a start time of the last MPS sighting recorded inside the impact zone; or

4. **[*]Sighted outside the impact zone and moving inbound,**
   a. Halt initiation of aerial survey,
   b. Conduct an additional surface survey equal to the waiting period specified in Table A-4 with a start time of the last MPS sighting recorded inbound.

If during the **aerial survey** MPS are:

1. **Not sighted inside the impact zone OR sighted outside the impact zone (and not inbound) AND not detected (acoustically)**, proceed with the detonation;
2. **Sighted inside the impact zone and, upon completion of the aerial survey, re-sighted outside the impact zone AND not detected (acoustically)**, proceed with the detonation to avoid reentry**;**
3. **[*]Sighted inside the impact zone and, upon completion of the aerial survey, NOT re-sighted outside the impact zone,**
   a. Halt the detonation,
   b. Opportunistically monitor visually and acoustically for the waiting period specified in Table A-4 with a start time of the last MPS sighting recorded inside the impact zone; and
   c. Reconduct the entire **aerial monitoring survey with simultaneous acoustic survey**; or
4. **[*]Sighted outside the impact zone and moving inbound,**
   a. Halt the detonation,
   b. Opportunistically monitor visually and acoustically for the waiting period specified in Table A-4 with a start time of the last MPS sighting inbound; and
   c. Reconduct the entire **aerial monitoring survey with simultaneous acoustic survey**.

Post-Det Monitoring

After severance charge detonation, the NMFS observers will conduct a 30 min **aerial monitoring survey** of the impact zone to detect for impacted MPS. If feasible, **passive-acoustic monitoring** should be continued until the end of the post-det monitoring period. If an MPS is observed shocked, injured, or killed, the operations will cease, attempts will be made to collect/resuscitate the animal, and NMFS SERO will be contacted as per the take event procedures described on page 9 of this appendix.

Scenario C4 also requires a **post-post-det aerial monitoring survey** to be conducted within 2-7 days after detonation activities conclude, conducted by helicopter or fixed-wing aircraft. When detailed current data are available, observations are to start at the removal site and proceed leeward and outward of wind and current movement. A 7 nmi x 7 nmi grid centered near the removal site will be surveyed. This grid includes eight, parallel transect lines each measuring 7 nmi long and spaced approximately 1 nmi apart. Any injured or killed MPS must be recorded, and if possible, tracked and collected after notifying NMFS

[*] Procedures for acoustic detections in steps 3 and 4 will be determined in the passive acoustic monitoring plan.

SERO. If no MPS are observed to be impacted during either aerial survey, the NMFS observers will record all of the necessary information as per the conditions detailed in MMS's permit approval letter and PROP guidelines for the preparation of a trip report.

A flowchart of the monitoring process and associated survey times for standard severance-scenarios C2 and C4 is provided in Figure A-5.

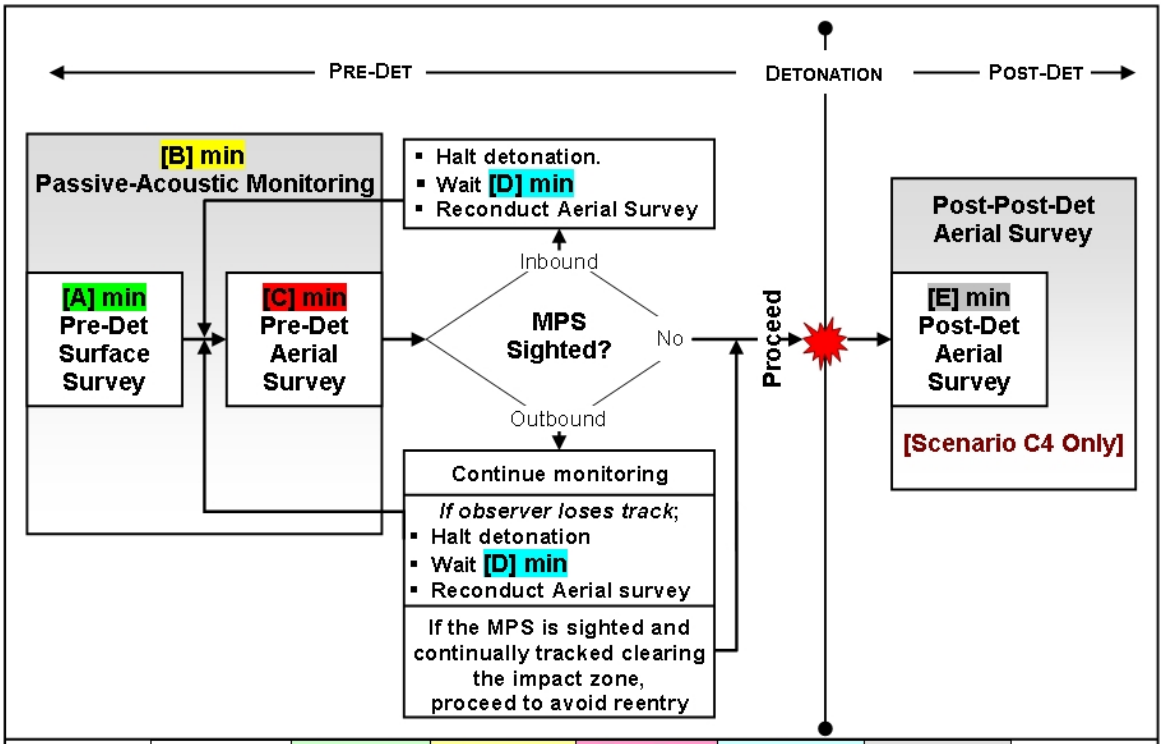

Scenario	Pre-Det Surface [A]	Passive Acoustic [B]	Pre-Det Aerial [C]	Waiting Period [D]	Post-Det Aerial [E]
	(Minutes)				
C2	90	120	30	30	30
C4	90	150	60	45	30

Figure A-5. Surveys and monitoring process for standard severance-scenarios C2 and C4.

Large Blasting Category

Shelf (<200 m) Scenarios D1 and D3

An operator proposing shelf-based (<200 m), explosive-severance activities conduced under the large blasting category will be limited to 200-lb charge sizes (BML or AML) and conduct all requisite monitoring during daylight hours out to the associated impact-zone radii listed below:

D1: 941 m (3,086 ft)
D3: 1,126 m (3,693 ft)

Required Observers

Generally, two NMFS observers are required to perform MPS detection surveys for large-blasting, shelf scenarios D1 and D3. If necessary, the PROP Manager will determine if additional observers are required to compensate for the complexity of severance activities and or structure configuration. In addition to meeting all reporting requirements, the NMFS observers would:

- Brief affected crew and severance contractors of the monitoring efforts and notify topsides personnel to report any sighted MPS to the observer or company representative immediately;
- Establish an active line of communication (such as 2-way radio) with company and blasting personnel; and
- Devote the entire, uninterrupted survey time to MPS monitoring.

Pre-Det Monitoring

Before severance charge detonation, NMFS observers will conduct a 120 min **surface monitoring survey** of the impact zone. The monitoring will be conducted from the highest vantage point(s) and/or other location(s) that provide the best, clear view of the entire impact zone. These vantage points may be on the structure being removed or proximal surface vessels such as crewboats and derrick barges. Once the surface monitoring is complete (i.e., the impact zone cleared of MPS), one or two NMFS observers will transfer to a helicopter to conduct a 45 min (Scenario D1) or 60 min (Scenario D3) **aerial monitoring survey**. NMFS may decide to have both observers fly the aerial survey or have one observer continue surface monitoring while the other observer flies the survey. The helicopter will traverse the impact zone at low speed/altitude in the specified pattern (Table A-2 on page 6).

If during the **surface survey** MPS are:

1. **Not sighted inside OR sighted outside the impact zone (and not inbound)**, proceed with the aerial survey;
2. **Sighted inside the impact zone and subsequently re-sighted outside the impact zone**, proceed with the aerial survey**;**
3. **Sighted inside the impact zone and NOT subsequently re-sighted outside the impact zone,**
    a. Halt initiation of aerial survey,
    b. Conduct an additional surface survey equal to the waiting period specified in Table A-4 with a start time of the last MPS sighting recorded inside the impact zone; or
4. **Sighted outside the impact zone and moving inbound,**
    a. Halt initiation of aerial survey,

b. Conduct an additional surface survey equal to the waiting period specified in Table A-4 with a start time of the last MPS sighting recorded inbound.

If during the **aerial survey** MPS are:

1. **Not sighted or sighted outside the impact zone (and not inbound)**, proceed with the detonation;
2. **Sighted inside the impact zone and, upon completion of the aerial survey, re-sighted outside the impact zone**, proceed with the detonation to avoid reentry**;**
3. **Sighted inside the impact zone and, upon completion of the aerial survey, NOT re-sighted outside the impact zone,**
   a. Halt the detonation,
   b. Monitor opportunistically for the waiting period specified in Table A-4 with a start time of the last MPS sighting recorded inside the impact zone; and
   c. Reconduct the entire **aerial monitoring survey**; or
4. **Sighted outside the impact zone and moving inbound,**
   a. Halt the detonation,
   b. Monitor opportunistically for the waiting period specified in Table A-4 with a start time of the last MPS sighting recorded inbound; and
   c. Reconduct the entire **aerial monitoring survey**.

Post-Det Monitoring

After severance charge detonation, the NMFS observers will conduct a 30 min **aerial monitoring survey** of the impact zone to detect for impacted MPS. If an MPS is observed shocked, injured, or killed, the operations will cease, attempts will be made to collect/resuscitate the animal, and NMFS SERO will be contacted as per the take event procedures described on page 9 of this appendix. If no MPS are observed to be impacted by the detonation, the NMFS observers will record all of the necessary information as per the conditions detailed in MMS's permit approval letter and PROP guidelines for the preparation of a trip report.

A flowchart of the monitoring process and associated survey times for large severance-scenarios D1 and D3 is provided in Figure A-6.

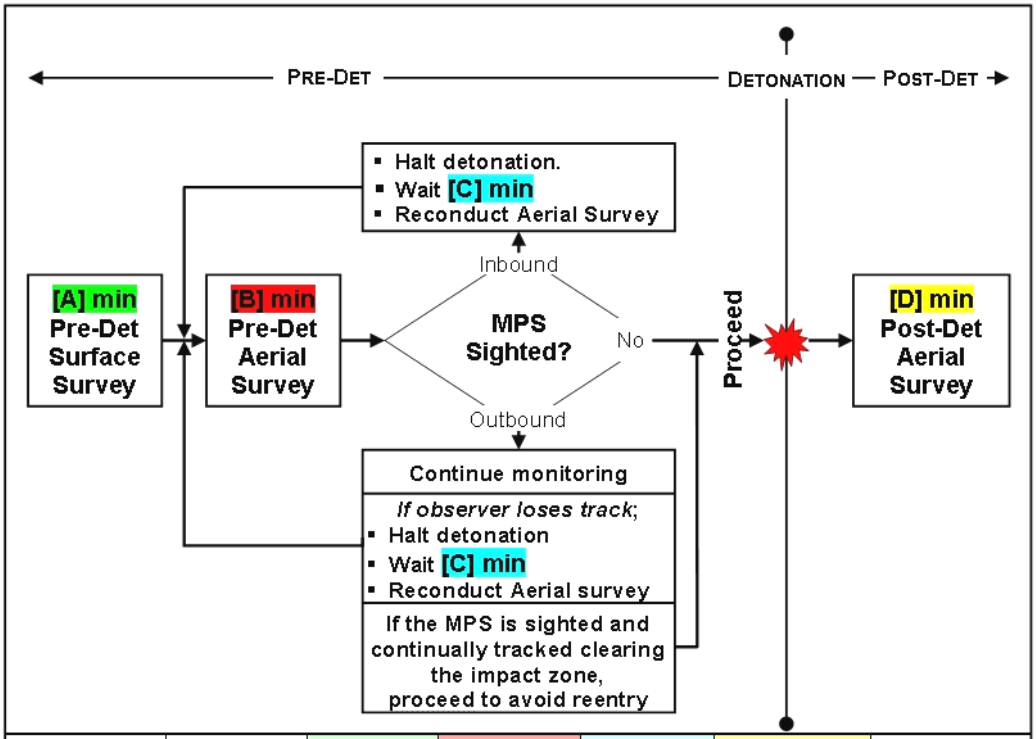

Scenario	Pre-Det Surface [A]	Pre-Det Aerial [B]	Waiting Period [C]	Post-Det Aerial [D]
	(Minutes)			
D1	120	45	30	30
D3	120	60	30	30

Figure A-6. Surveys and monitoring process for large severance-scenarios D1 and D3.

Slope (>200 m) Scenarios D2 and D4

An operator proposing slope-based (<200 m), explosive-severance activities conduced under the large blasting category will be limited to 200-lb charge sizes (BML or AML) and conduct all requisite monitoring during daylight hours out to the associated impact-zone radii listed below:

D2: 941 m (3,086 ft)
D4: 1,126 m (3,693 ft)

Required Observers

Since large-blasting, slope scenarios require a minimum of three (3) NMFS observers (PROP or contracted personnel) for the simultaneous surface, aerial, and acoustic monitoring surveys, at least two (2) "teams" of observers will be required. The PROP Manager will determine each "team" size depending upon the complexity of severance activities and or structure configuration. In addition to meeting all reporting requirements, the NMFS observers would:

- Brief affected crew and severance contractors of the monitoring efforts and notify topsides personnel to report any sighted MPS to the observer or company representative immediately;
- Establish an active line of communication (such as 2-way radio) with company, blasting, and acoustic monitoring personnel; and
- Devote the entire, uninterrupted survey time to MPS monitoring.

Pre-Det Monitoring

Before severance charge detonation, NMFS observers will begin a 120 min **surface monitoring survey** and a 180 min (Scenario D2) or 210 min (Scenario D4) **passive-acoustic monitoring survey** of the impact zone. The surface monitoring will be conducted from the highest vantage point(s) and/or other location(s) that provide the best, clear view of the entire impact zone. These vantage points may be on the structure being removed or proximal surface vessels such as crewboats and derrick barges. The acoustic monitoring will be conducted using NOAA-approved passive-acoustic monitoring protocols, devices, and technicians. Once the surface monitoring is complete (i.e., the impact zone cleared of MPS), the acoustic survey will continue while one or two of the NMFS observers transfer to a helicopter to conduct a 60 min **aerial monitoring survey**. The PROP Manager may decide to have two observers fly the aerial survey or have one observer continue surface monitoring while the other observer flies the survey. The helicopter will traverse the impact zone at low speed/altitude in the specified grid pattern (Table A-2 on page 6).

If during the **surface survey** MPS are:

1. **Not sighted inside the impact zone OR sighted outside the impact zone (and not inbound) AND not detected (acoustically)** proceed with the aerial survey,
2. **Sighted inside the impact zone and subsequently re-sighted outside the impact zone AND not detected (acoustically)**, proceed with the aerial survey,
3. **[*]Sighted inside the impact zone and, upon completion of the surface survey, NOT re-sighted outside the impact zone,**
    a. Halt initiation of aerial survey,

[*] Procedures for acoustic detections in steps 3 and 4 will be determined in the passive acoustic monitoring plan.

b. Conduct an additional surface survey equal to the waiting period specified in Table A-4 with a start time of the last MPS sighting recorded inside the impact zone; or

5. ***Sighted outside the impact zone and moving inbound,**
   a. Halt initiation of aerial survey,
   b. Conduct an additional surface survey equal to the waiting period specified in Table A-4 with a start time of the last MPS sighting recorded inbound.

If during the **aerial survey** MPS are:

1. **Not sighted inside the impact zone OR sighted outside the impact zone (and not inbound) AND not detected (acoustically)**, proceed with the detonation;
2. **Sighted inside the impact zone and, upon completion of the aerial survey, re-sighted outside the impact zone AND not detected (acoustically)**, proceed with the detonation to avoid reentry**;**
3. ***Sighted inside the impact zone and, upon completion of the aerial survey, NOT re-sighted outside the impact zone,**
   a. Halt the detonation,
   b. Opportunistically monitor visually and acoustically for the waiting period specified in Table A-4 with a start time of the last MPS sighting recorded inside the impact zone; and
   c. Reconduct the entire **aerial monitoring survey with simultaneous acoustic survey**; or
4. **∗Sighted outside the impact zone and moving inbound,**
   a. Halt the detonation,
   b. Opportunistically monitor visually and acoustically for the waiting period specified in Table A-4 with a start time of the last MPS sighting recorded inbound; and
   c. Reconduct the entire **aerial monitoring survey with simultaneous acoustic survey**.

Post-Det Monitoring

After severance charge detonation, the NMFS observers will conduct a 30 min **aerial monitoring survey** of the impact zone to detect for impacted MPS. If feasible, **passive-acoustic monitoring** will continue until the end of the post-det monitoring period. If an MPS is observed shocked, injured, or killed, the operations will cease, attempts will be made to collect/resuscitate the animal, and NMFS SERO will be contacted as per the take event procedures described on page 9 of this appendix.

Scenarios D2 and D4 also require a **post-post-det aerial monitoring survey** to be conducted within 2-7 days after detonation activities conclude. When detailed current data are available, observations are to start at the removal site and proceed leeward and outward of wind and current movement. A 7nmi x 7 nmi grid centered near the removal site will be surveyed. This grid includes eight, parallel transect lines each measuring 7 nmi long and spaced approximately 1 nmi apart. Any injured or

* Procedures for acoustic detections in steps 3 and 4 will be determined in the passive acoustic monitoring plan.

killed MPS must be recorded in the survey report and NMFS SERO must be notified. NMFS SERO may request that the carcass be tracked and collected if possible. If no MPS are observed to be impacted during either aerial survey, the NMFS observers will record all of the necessary information as per the conditions detailed in MMS's permit approval letter and PROP guidelines for the preparation of a trip report.

A flowchart of the standard monitoring process and associated survey times for large severance-scenarios D2 and D4 is provided in Figure A-7.

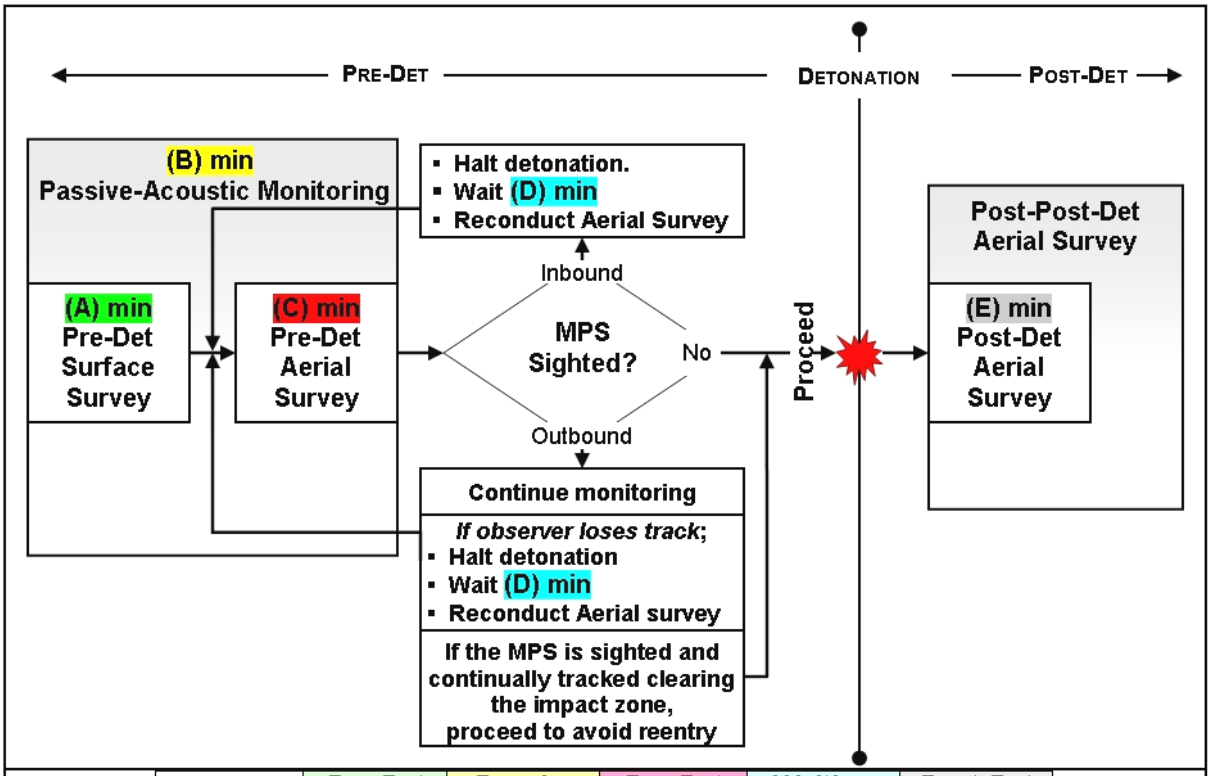

Scenario	Pre-Det Surface [A]	Passive Acoustic [B]	Pre-Det Aerial [C]	Waiting Period [D]	Post-Det Aerial [E]
	(Minutes)				
D2	120	180	60	45	30
D4	120	210	60	45	30

Figure A-7. Surveys and monitoring process for large severance-scenarios D2 and D4.

Specialty Blasting Category

Shelf (<200 m) Scenarios E1 and E3

An operator proposing shelf-based (<200 m), explosive-severance activities conduced under the specialty blasting category will be limited to 500-lb charge sizes (BML or AML) and conduct all requisite monitoring during daylight hours out to the associated impact-zone radii listed below:

E1: 1,500 m (4,916 ft)
E3: 1,528 m (5,012 ft)

Required Observers

Generally, two NMFS observers (PROP or contracted personnel) are required to perform MPS detection surveys for specialty-blasting, shelf scenarios E1 and E3. If necessary, the PROP Manager will determine if additional observers are required to compensate for the complexity of severance activities and or structure configuration. In addition to meeting all reporting requirements, the NMFS observers would:

- Brief affected crew and severance contractors of the monitoring efforts and notify topsides personnel to report any sighted MPS to the observer or company representative immediately;
- Establish an active line of communication (such as 2-way radio) with company and blasting personnel; and
- Devote the entire, uninterrupted survey time to MPS monitoring.

Pre-Det Monitoring

Before severance charge detonation, NMFS observers will conduct a 150 min **surface monitoring survey** of the impact zone. The monitoring will be conducted from the highest vantage point(s) and/or other location(s) that provide the best, clear view of the entire impact zone. These vantage points may be on the structure being removed or proximal surface vessels such as crewboats and derrick barges. Once the surface monitoring is complete (i.e., the impact zone cleared of MPS), one or two of the NMFS observers will transfer to a helicopter to conduct a 90 min **aerial monitoring survey**. The PROP Manager may decide to have both observers fly the aerial survey or have one observer continue surface monitoring while the other observer flies the survey. The helicopter will traverse the impact zone at low speed/altitude in the specified pattern (Table A-2 on page 6).

If during the **surface survey** MPS are:

1. **Not sighted inside OR sighted outside the impact zone (and not inbound)**, proceed with the aerial survey;
2. **Sighted inside the impact zone and subsequently re-sighted outside the impact zone**, proceed with the aerial survey**;**
3. **Sighted inside the impact zone and NOT subsequently re-sighted outside the impact zone,**
    a. Halt initiation of aerial survey,
    b. Conduct an additional surface survey equal to the waiting period specified in Table A-4 with a start time of the last MPS sighting recorded inside the impact zone; or
4. **Sighted outside the impact zone and moving inbound,**
    a. Halt initiation of aerial survey,

b. Conduct an additional surface survey equal to the waiting period specified in Table A-4 with a start time of the last MPS sighting recorded inbound.

If during the **aerial survey** MPS are:

1. **Not sighted or sighted outside the impact zone (and not inbound)**, proceed with the detonation;
2. **Sighted inside the impact zone and, upon completion of the aerial survey, re-sighted outside the impact zone**, proceed with the detonation to avoid reentry**;**
3. **Sighted inside the impact zone and, upon completion of the aerial survey, NOT re-sighted outside the impact zone,**
   a. Halt the detonation,
   b. Monitor opportunistically for the waiting period specified in Table A-4 with a start time of the last MPS sighting recorded inside the impact zone; and
   c. Reconduct the entire **aerial monitoring survey**; or
4. **Sighted outside the impact zone and moving inbound,**
   a. Halt the detonation,
   b. Monitor opportunistically for the waiting period specified in Table A-4 with a start time of the last MPS sighting recorded inbound; and
   c. Reconduct the entire **aerial monitoring survey**.

Post-Det Monitoring

After severance charge detonation, the NMFS observers will conduct a 45 min **aerial monitoring survey** of the impact zone to detect for impacted MPS. If an MPS is observed shocked, injured, or killed, the operations will cease, attempts will be made to collect/resuscitate the animal, and NMFS SERO will be contacted as per the take event procedures described on page 9 of this appendix. If no MPS are observed to be impacted by the detonation, the NMFS observers will record all of the necessary information as per the conditions detailed in MMS's permit approval letter and PROP guidelines for the preparation of a trip report.

A flowchart of the monitoring process and associated survey times for specialty severance-scenarios E1 and E3 is provided in Figure A-8.

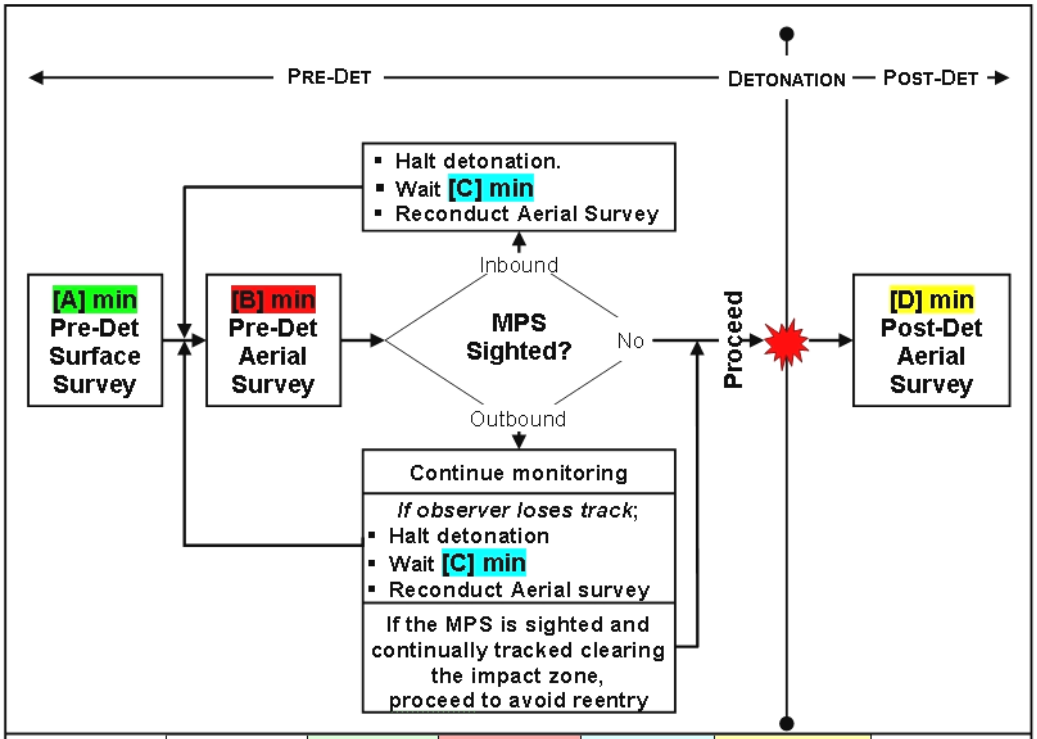

Scenario	Pre-Det Surface [A]	Pre-Det Aerial [B]	Waiting Period [C]	Post-Det Aerial [D]
	(Minutes)			
E1	150	90	45	45
E3	150	90	45	45

Figure A-8. Surveys and monitoring process for large severance-scenarios E1 and E3.

Slope (>200 m) Scenarios E2 and E4

An operator proposing slope-based (>200 m), explosive-severance activities conduced under the specialty blasting category will be limited to 500-lb charge sizes (BML or AML) and conduct all requisite monitoring during daylight hours out to the associated impact-zone radii listed below:

E2: 1,500 m (4,916 ft)
E4: 1,528 m (5,012 ft)

Required Observers

Since specialty-blasting, slope scenarios require a minimum of three (3) NMFS observers (PROP or contracted personnel) for the simultaneous surface, aerial, and acoustic monitoring surveys, at least two (2) "teams" of observers will be required. The PROP Manager will determine each "team" size depending upon the complexity of severance activities and or structure configuration. In addition to meeting all reporting requirements, the NMFS observers would:

- Brief affected crew and severance contractors of the monitoring efforts and notify topsides personnel to report any sighted MPS to the observer or company representative immediately;
- Establish an active line of communication (such as 2-way radio) with company, blasting, and acoustic monitoring personnel; and
- Devote the entire, uninterrupted survey time to MPS monitoring.

Pre-Det Monitoring

Before severance charge detonation, NMFS observers will begin a 180 min **surface monitoring survey** and a 270 min **passive-acoustic monitoring survey** of the impact zone. The surface monitoring will be conducted from the highest vantage point(s) and/or other location(s) that provide the best, clear view of the entire impact zone. These vantage points may be on the structure being removed or proximal surface vessels such as crewboats and derrick barges. The acoustic monitoring will be conducted using NOAA-approved passive-acoustic monitoring protocols, devices, and technicians. Once the surface monitoring is complete (i.e., the impact zone cleared of MPS), the acoustic survey will continue while one or two of the NMFS observers transfer to a helicopter to conduct a 90 min **aerial monitoring survey**. The PROP Manager may decide to have both observers fly the aerial survey or have one observer continue surface monitoring while the other observer flies the survey. The helicopter will traverse the impact zone at low speed/altitude in the specified pattern (Table A-2 on page 6).

If during the **surface survey** MPS are:

1. **Not sighted inside the impact zone OR sighted outside the impact zone (and not inbound) AND not detected (acoustically)** proceed with the aerial survey;

2. **Sighted inside the impact zone and subsequently re-sighted outside the impact zone AND not detected (acoustically), proceed with the aerial survey;**

3. ***Sighted inside the impact zone and, upon completion of the surface survey, NOT re-sighted outside the impact zone,**
    a. Halt initiation of aerial survey,

* Procedures for acoustic detections in steps 3 and 4 will be determined in the passive acoustic monitoring plan.

b. Conduct an additional surface survey equal to the waiting period specified in Table A-4 with a start time of the last MPS sighting recorded inside the impact zone; or

4. ∗**Sighted outside the impact zone and moving inbound,**
   a. Halt initiation of aerial survey,
   b. Conduct an additional surface survey equal to the waiting period specified in Table A-4 with a start time of the last MPS sighting recorded inbound.

If during the **aerial survey** MPS are:

1. **Not sighted inside the impact zone OR sighted outside the impact zone (and not inbound) AND not detected (acoustically)**, proceed with the detonation;
2. **Sighted inside the impact zone and, upon completion of the aerial survey, re-sighted outside the impact zone AND not detected (acoustically)**, proceed with the detonation to avoid reentry**;**
3. **[*]Sighted inside the impact zone and, upon completion of the aerial survey, NOT re-sighted outside the impact zone,**
   a. Halt the detonation,
   b. Opportunistically monitor visually and acoustically for the waiting period specified in Table A-4 with a start time of the last MPS sighting recorded inside the impact zone; and
   c. Reconduct the entire **aerial monitoring survey with simultaneous acoustic survey**; or
4. ∗**Sighted outside the impact zone and moving inbound,**
   a. Halt the detonation,
   b. Opportunistically monitor visually and acoustically for the waiting period specified in Table A-4 with a start time of the last MPS sighting recorded inbound; and
   c. Reconduct the entire **aerial monitoring survey with simultaneous acoustic survey**.

Post-Det Monitoring

After severance charge detonation, the NMFS observers will conduct a 45 min **aerial monitoring survey** of the impact zone to detect for impacted MPS. If feasible, **passive-acoustic monitoring** will continue until the end of the post-det monitoring period. If an MPS is observed shocked, injured, or killed, the operations will cease, attempts will be made to collect/resuscitate the animal, and NMFS SERO will be contacted as per the take event procedures described on page 9 of this appendix.

Scenarios E2 and E4 also require a **post-post-det aerial monitoring survey** to be conducted within 2-7 days after detonation activities conclude. When detailed current data are available, observations are to start at the removal site and proceed leeward and outward of wind and current movement. A 7nmi x 7 nmi grid centered near the removal site will be surveyed. This grid includes eight, parallel

[*] Procedures for acoustic detections in steps 3 and 4 will be determined in the passive acoustic monitoring plan.

transect lines each measuring 7 nmi long and spaced approximately 1 nmi apart. Any injured or killed MPS must be recorded in the survey report and NMFS SERO must be notified. NMFS SERO may request that the carcass be tracked and collected if possible. If no MPS are observed to be impacted during either aerial survey, the NMFS observers will record all of the necessary information as per the conditions detailed in MMS's permit approval letter and PROP guidelines for the preparation of a trip report.

A flowchart of the monitoring process and associated survey times for specialty severance-scenarios E2 and E4 is provided in Figure A-9.

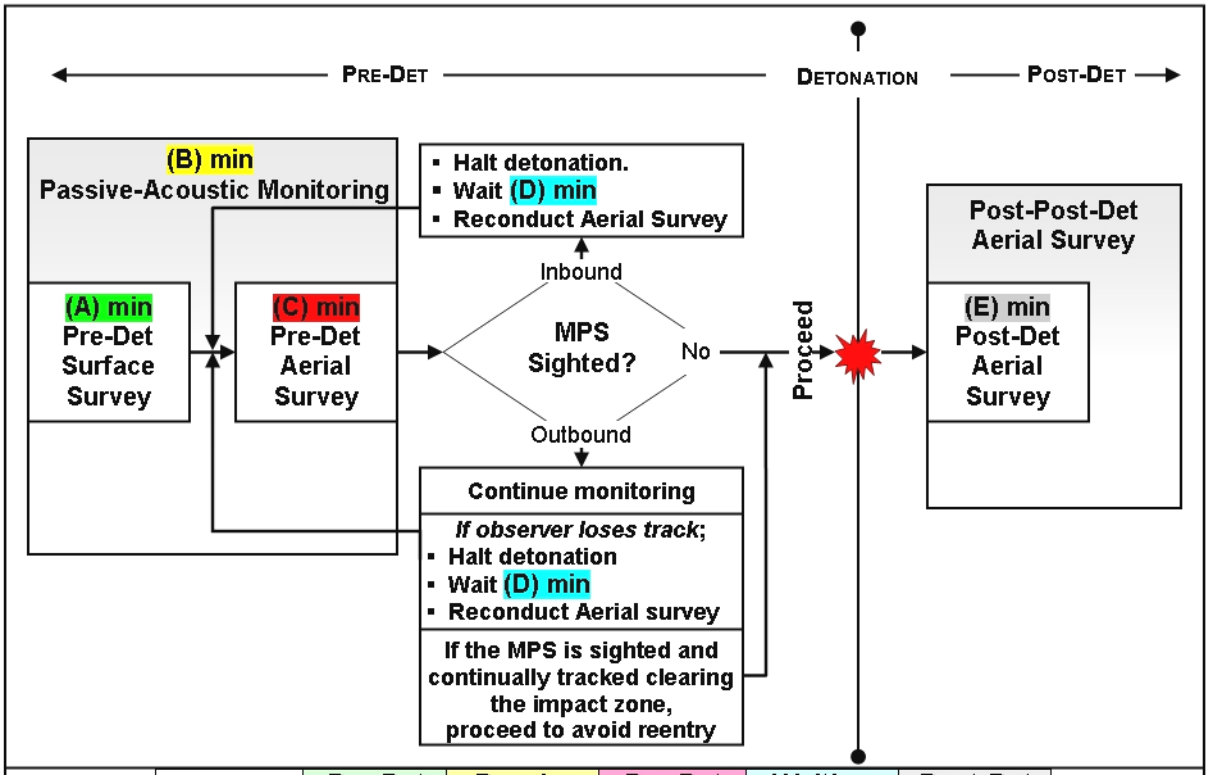

Scenario	Pre-Det Surface [A]	Passive Acoustic [B]	Pre-Det Aerial [C]	Waiting Period [D]	Post-Det Aerial [E]
	(Minutes)				
E2	180	270	90	45	45
E4	180	270	90	45	45

Figure A-9. Surveys and monitoring process for large severance-scenarios E2 and E4.