BULLETIN OF MARINE SCIENCE, 39(3): 719–722, 1986

A COLLAPSIBLE TRAP FOR UNDERWATER FISH TAGGING

Gregg R. Gitschlag

A typical fish tagging project includes the capture of specimens at depth, rapid retrieval to the surface, venting of distended gas bladders when present, tagging, and release at the surface. However, rapid decompression of physoclistous fish may cause severe overexpansion of the gas bladder, damage to internal organs, decompression sickness, embolism, and death. To reduce mortality and stress of fish to be tagged, I developed a specialized trap which facilitates capture, immobilization, and underwater tagging of fish (see Jones, 1979, and Hislop, 1969, for other underwater fish marking techniques).

Materials

Aluminum conduit (1.3 cm diameter) was used to construct a three-dimensional trap frame measuring 80 × 80 × 120 cm with moveable top and bottom panels. Conduit was cut and welded into two 80 × 120-cm rectangles. A 3-cm-long piece of aluminum pipe with an external diameter slightly smaller than the 1.3-cm internal diameter of the conduit was welded at each corner perpendicular to the plane of the rectangles. Four 80-cm lengths of conduit were cut and fitted over the 3-cm pieces between the two rectangles to form a three-dimensional frame (designated main frame in Fig. 1). Holes were drilled where the pipe and conduit overlapped, and nuts and bolts were used to fasten them together. A metal ring about 5 cm in diameter was welded to each of the top four corners to facilitate attachment of a deployment line. Two additional rectangular frames were welded which served as the top (77 × 120 cm) and bottom (80 × 120 cm) of the trap. These were secured to the three-dimensional frame with plastic cable ties.

Trawl netting (dipped cotton with 3.8-cm mesh openings) was tied to the conduit frame with twine to form the walls of the trap. Netting was stretched tightly and secured to the top and bottom frames individually. The lower edge of a continuous piece of netting was attached to the bottom of the main trap frame and the upper edge was lashed to the top frame to form four vertical walls. A funnel-shaped opening was sewn into one wall to permit fish to enter the trap. Twine tied from the netting of the funnel to the top and side net panels permitted adjustment of the size and shape of the opening. The completed trap is shown in Figure 2.

Results and Discussion

Procedures for using the trap to tag fish underwater are elementary. The trap can be baited or unbaited and deployed on or over the sea bottom. After a given soak time tagging operations can be conducted by a two-man SCUBA diving team. Using knives or other tools divers sever the plastic cable ties securing the top panel and manually collapse it against the bottom panel. During this procedure the netting of the funnel-shaped entrance is compressed to prevent escape of trapped fish and the netting which forms the side walls hangs loosely from the trap frame. While one diver restrains a fish either between the juxtaposed top and bottom panels or in the loose netting another diver tags the fish through openings in the mesh using a Floy Mark II[1] tagging gun and plastic spaghetti tags. Fish length is obtained using a transparent measuring board placed against the netting

[1] Use of trade names does not imply endorsement by NOAA.

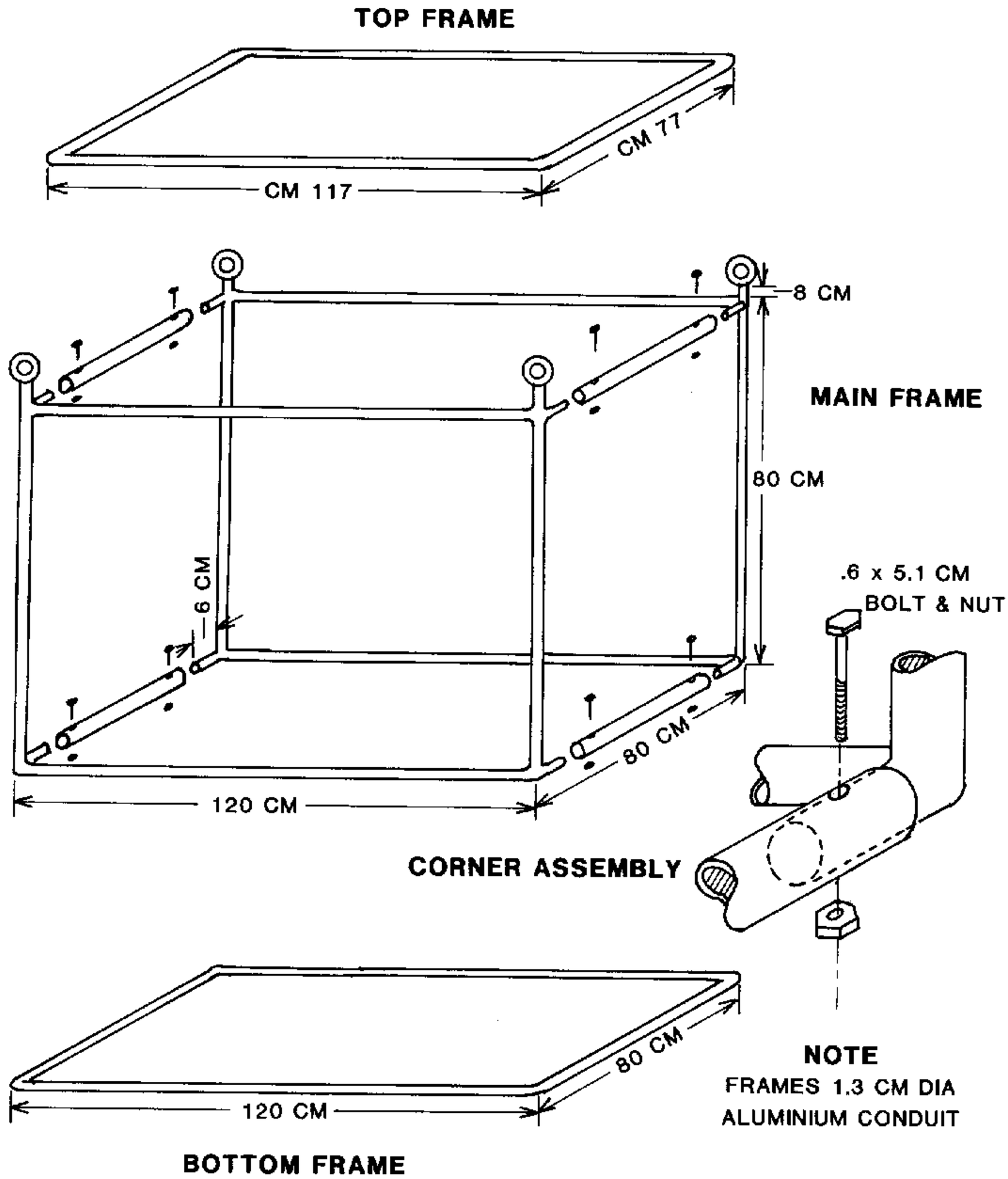

Figure 1. Construction diagram of fish trap.

adjacent to the immobilized fish. With the exception of a large fish literally tearing an opening in the net walls, escape is virtually impossible since tagging and measuring are conducted without opening the trap. Once the majority of fish are tagged it can become difficult and time consuming to isolate and mark the remaining untagged individuals. In one test where approximately 50 fish were captured, 36 fish were tagged in 57 minutes before divers ceased tagging due to reduced efficiency. After tagging is completed, the trap is returned to its original configuration by reattaching the top panel to the frame with new cable ties. Cable ties securing the bottom panel to the main frame of the trap are then cut on all but one side allowing the bottom panel to fall open like a hinged door to release the fish en masse (Fig. 2).

The trap frame is large enough to allow divers access to all sections of the collapsed trap during tagging. The collapsed trap functions as a horizontal platform

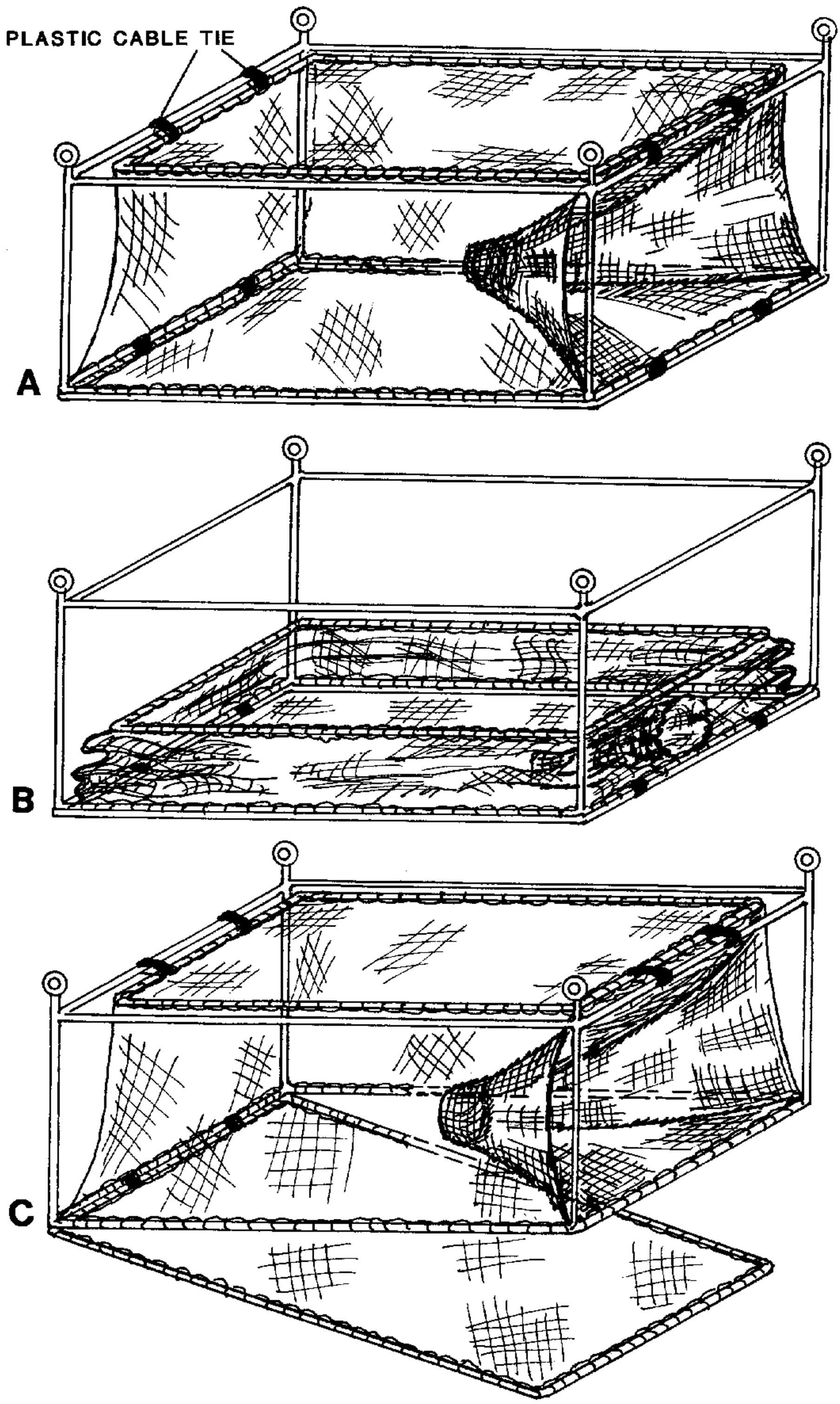

Figure 2. Operational schematics of fish trap. a. Trap ready for fishing. b. Trap collapsed for fish tagging. c. Bottom panel open for release of tagged fish.

which enables divers to maintain their position in the water column with a minimum of physical exertion and serves as a work table to reduce the possibility of hand-held gear falling to the sea floor.

Collapsing the trap for long periods should be avoided to prevent damage to fish. Caution should be exercised in operating the collapsed trap when secured to a surface vessel in surge conditions. Attachment of the trap to a subsurface float anchored to the sea bottom can eliminate the vertical motion caused by wave surge.

The collapsible trap has applications for both marine and freshwater fish which can be captured in the trap at depths beyond the limits of SCUBA divers and raised to an intermediate depth where tagging can be conducted within the working range of divers. Fish can be lowered, while still in the trap, and released without the aid of divers on the ocean bottom where topographic relief (e.g., reef, submerged structures) can provide shelter from predators. Sanderman and Rees (1963) discuss several economical release devices designed for this purpose. Optimal tagging depths depend on the physiological characteristics of the species being studied and the amount of bottom time required by divers to complete tagging procedures.

Acknowledgments

Special thanks go to aquanauts I. Workman, L. Martin and M. Renaud for their assistance in design ideas, trap construction, and underwater work. This study was supported in part by a grant from NOAA's Undersea Research Program Office. Additional support was provided by the Galveston and Pascagoula Laboratories of the National Marine Fisheries Service and the NOAA Diving Office. Also acknowledged for their exceptional and unique support are the staff of NOAA's Undersea Laboratory System, Hydrolab, where preliminary trap designs were tested.

Literature Cited

Hislop, J. R. G. 1969. Investigations by divers on the survival of tagged haddock. Underwat. Ass. Rep. 1969: 85–90.

Jones, R. 1979. Materials and methods used in marking experiments in fishery research. FAO Fish. Tech. Pap. 190: 122–134.

Sanderman, E. J. and E. I. S. Rees. 1963. Some notes on the tagging of redfish, *Sebastes marinus* L., from deep water. Spec. Publ. ICNAF 4: 300.

Date Accepted: August 6, 1986.

Address: *NOAA/National Marine Fisheries Service, Southeast Fisheries Center, Galveston Laboratory, 4700 Avenue U, Galveston, Texas 77550.*